1/35 MILITARY MINIATURE VEHICLE UPGRADE SERIES PE351318

WWII German Pz.Kpfw KV-2 754(r) Heavy Tank Upgrade Set

二战德军 缴获版 KV-2 754（R） 重型坦克改造件

[For TRUMPERTER 00367]

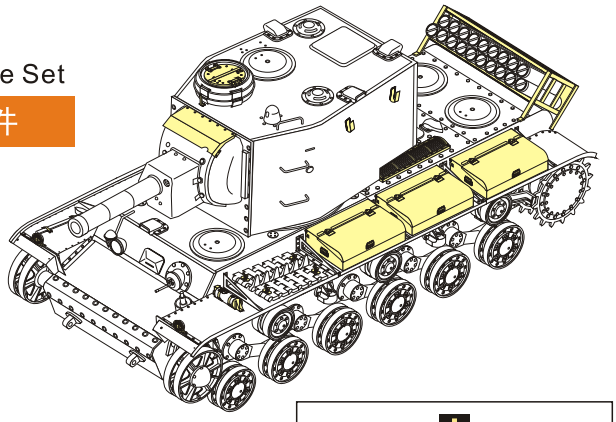

■推荐使用工具 RECOMMENDED TOOLS

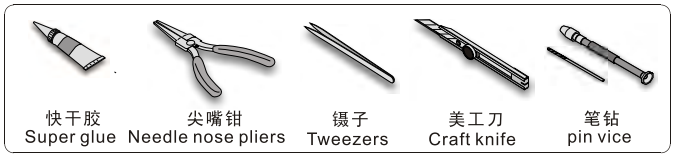

安装 install　折叠 bend　A1 改造件零件编号 PE/resin part number　B12 原零件编号 kit part number　C22 被替换的原零件编号 replaced kit part number　另一侧相同制作 repeat on opposite side

切除 remove　打磨 grind off　弧度卷曲 radial bending　x2 制作若干组 multiple assembly　选择安装 alternative　钻孔 drill　用胶棒制作 make from plastic rod

用尖端在凹槽处冲压
use penpoint to press on the dent

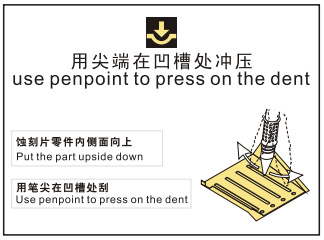

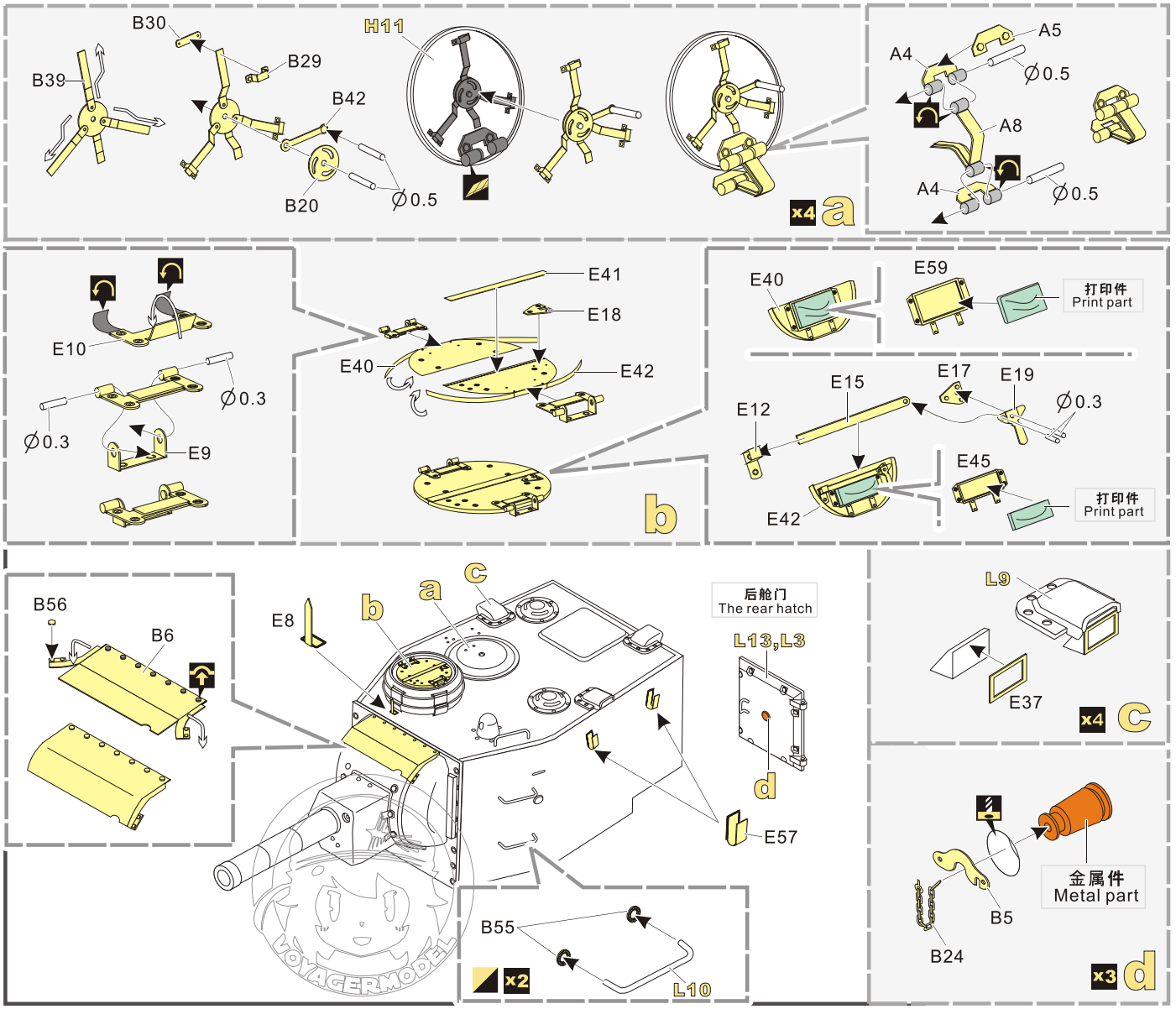

©2003-2025 SHANGHAI VOYAGERMODEL Co.,LTD

1/35 MILITARY MINIATURE VEHICLE UPGRADE SERIES PE351318

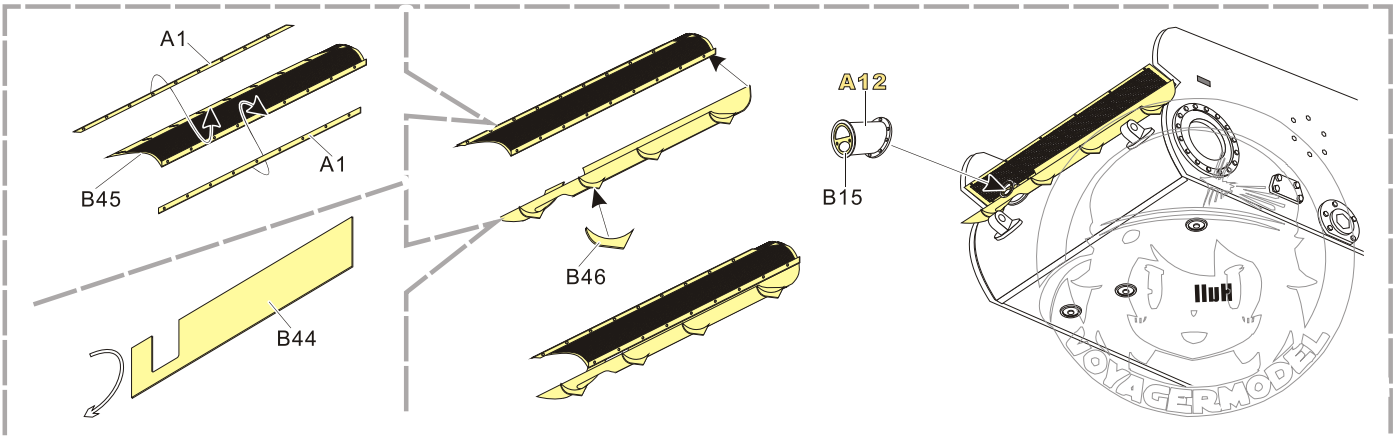

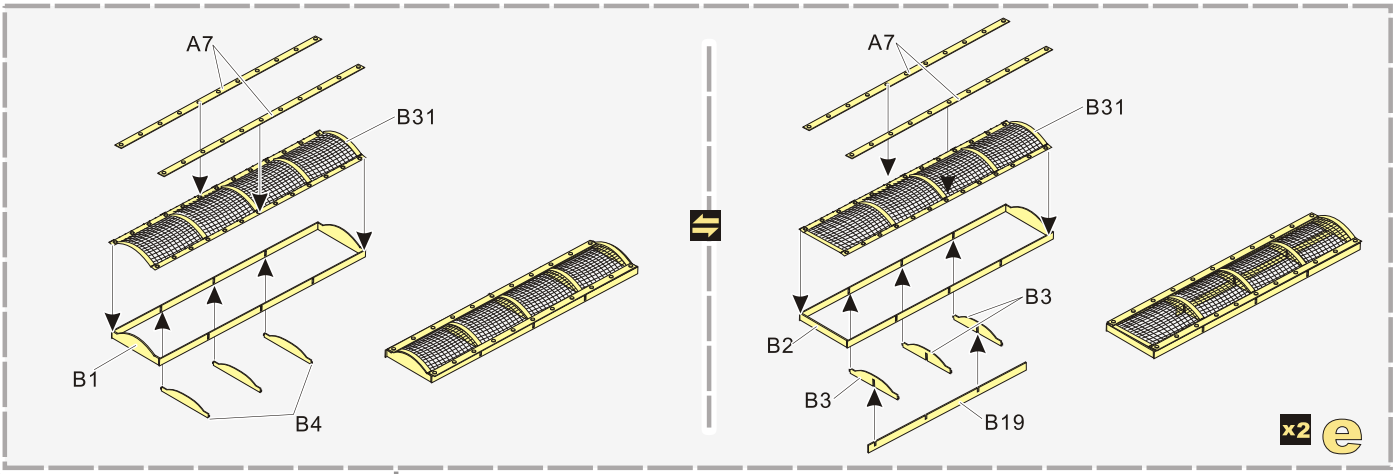

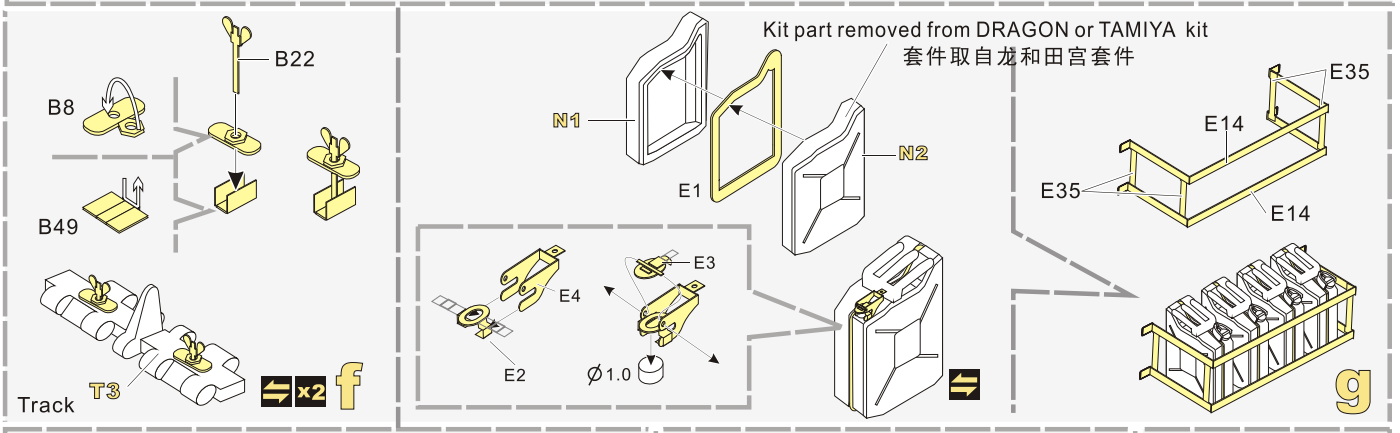

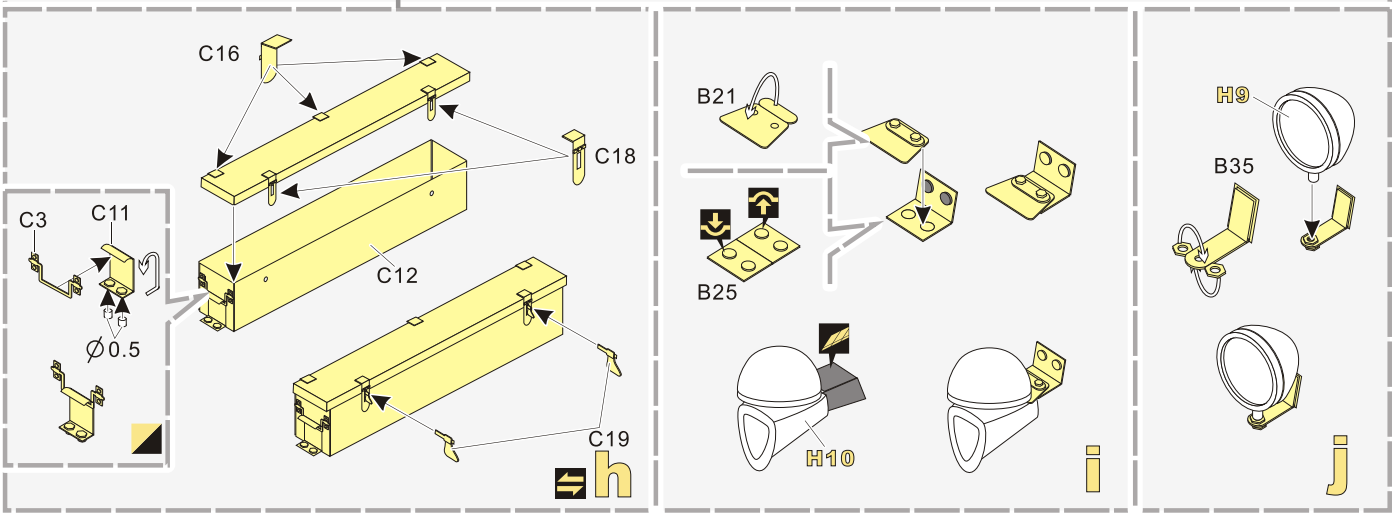

©2003-2025 SHANGHAI VOYAGERMODEL Co.,LTD

1/35 MILITARY MINIATURE VEHICLE UPGRADE SERIES PE351318

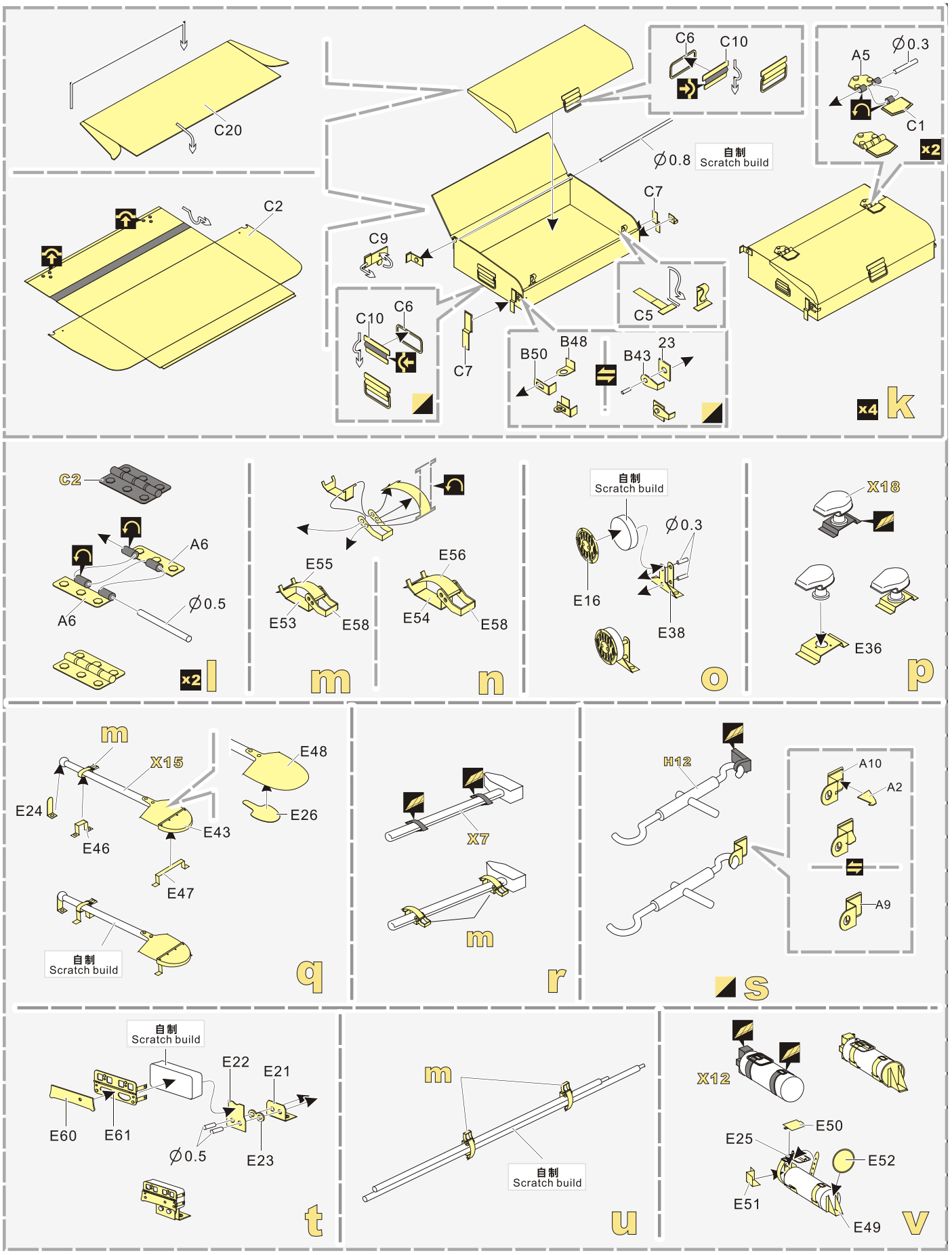

©2003-2025 SHANGHAI VOYAGERMODEL Co.,LTD

1/35 MILITARY MINIATURE VEHICLE UPGRADE SERIES PE351318

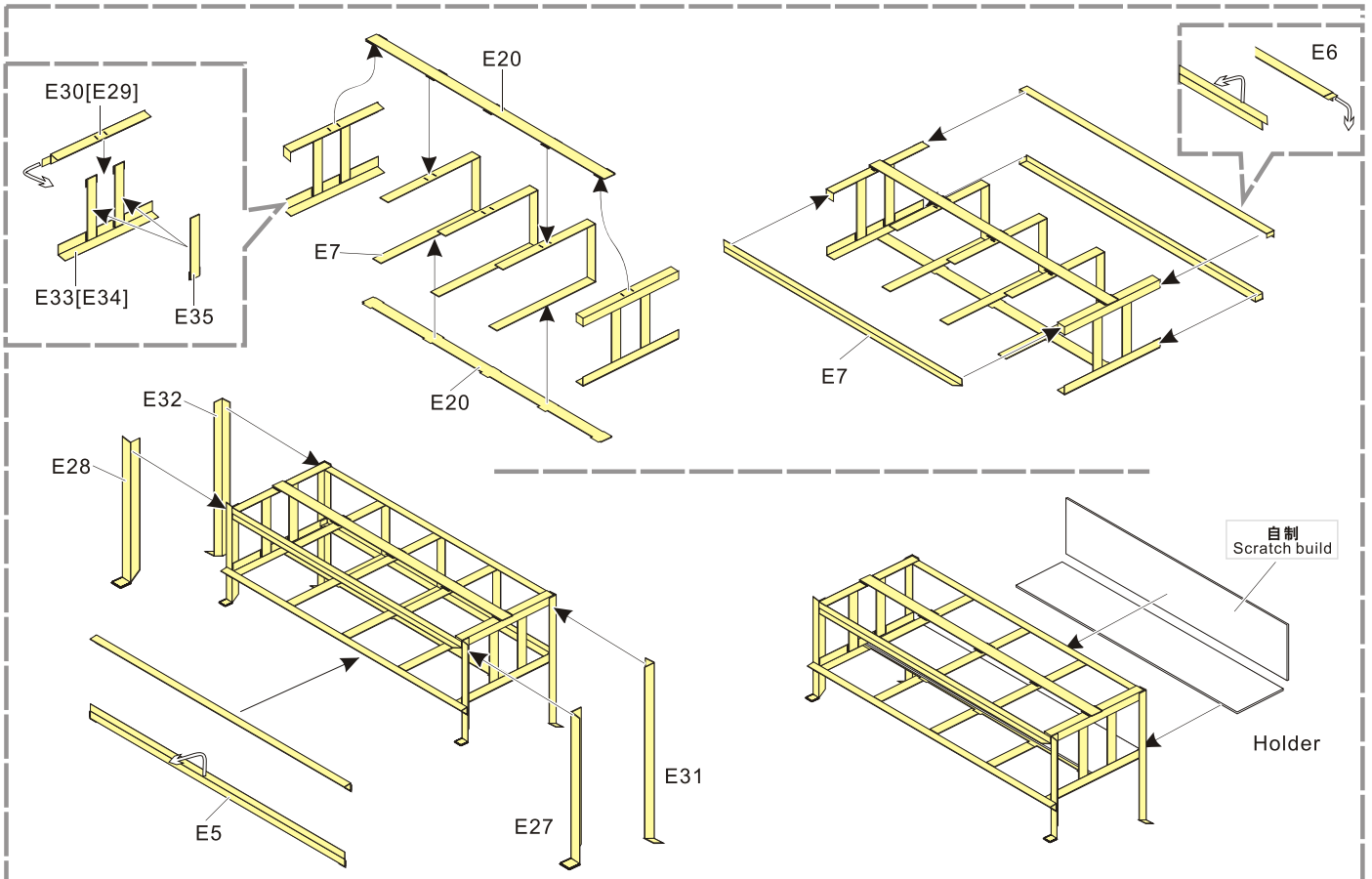

Https://www.voyagermodel.com/productdetails.asp?itemid=PE351318

VOYAGER MODEL

更多PE351318样品照片参考请扫一扫
MORE PICTUER OF PE 351318
REFERENCE SCAN HERE

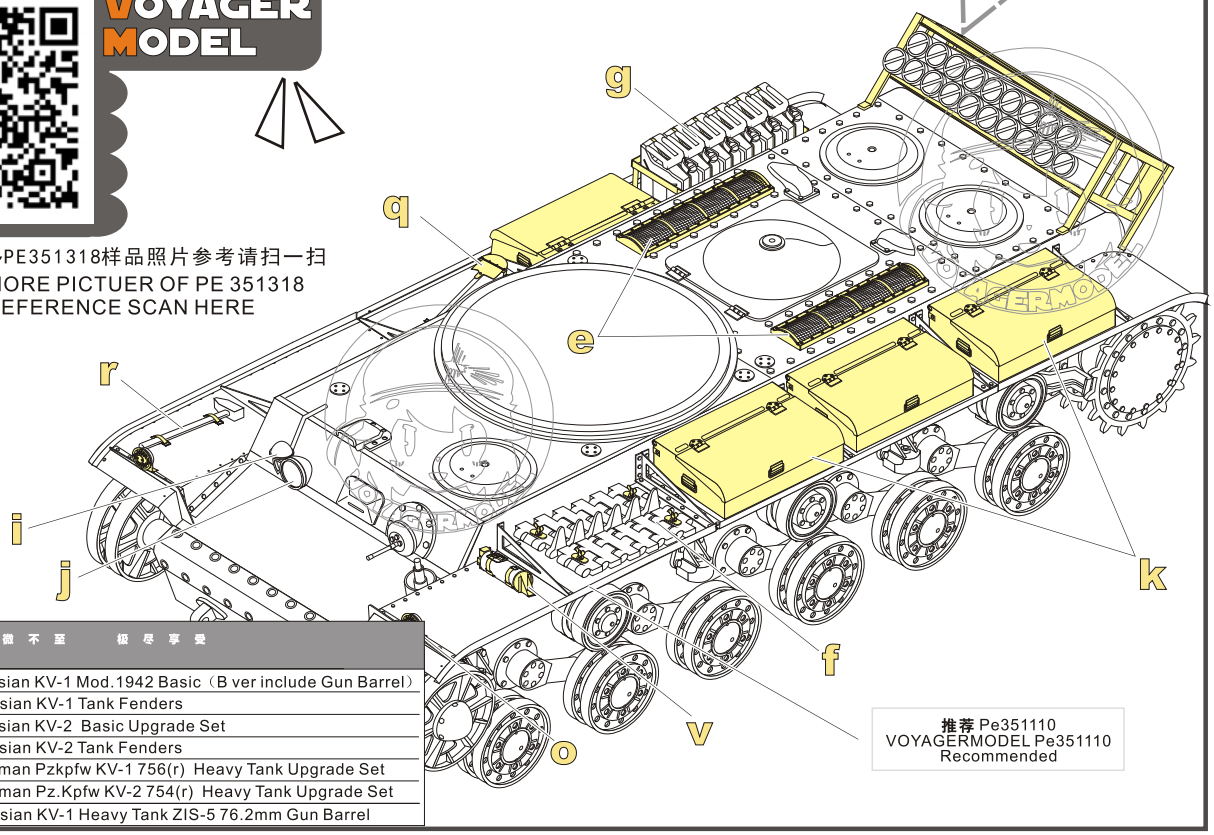

VOYAGERMODEL® 无 微 不 至 极 尽 享 受
Recommended item

PE 351168	WWII Russian KV-1 Mod.1942 Basic（B ver include Gun Barrel）
PE 351095	WWII Russian KV-1 Tank Fenders
PE 351109	WWII Russian KV-2 Basic Upgrade Set
PE 351110	WWII Russian KV-2 Tank Fenders
PE 351317	WWII German Pzkpfw KV-1 756(r) Heavy Tank Upgrade Set
PE 351318	WWII German Pz.Kpfw KV-2 754(r) Heavy Tank Upgrade Set
VBS0547	WWII Russian KV-1 Heavy Tank ZIS-5 76.2mm Gun Barrel

©2003-2025 SHANGHAI VOYAGERMODEL Co.,LTD