1/35 MILITARY MINIATURE VEHICLE UPGRADE SERIES PE351341

WWII US M4A3 75w Middel Tank VVSS Basic Upgrade Set

二战美国M4A3 75w VVSS中型坦克基本改造件

[For DRAGON 6698 6543]

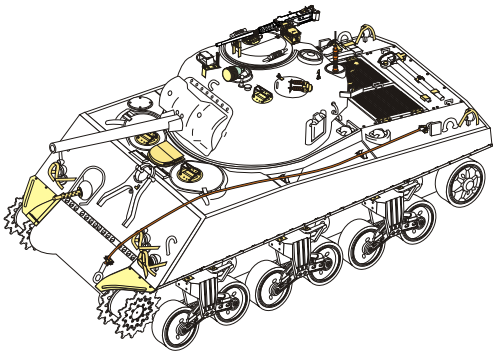

Technical assistance provided by Mr.ZHONG MINGZHOU

■推荐使用工具 RECOMMENDED TOOLS

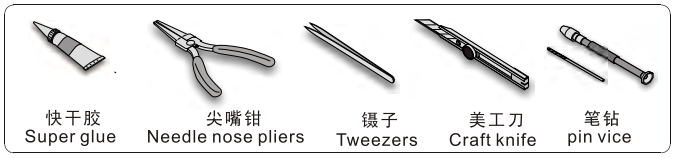

安装 install　折叠 bend　A1 改造件零件编号 PE/resin part number　B12 原零件编号 kit part number　C22 被替换的原零件编号 replaced kit part number　另一侧相同制作 repeat on opposite side

切除 remove　打磨 grind off　弧度卷曲 radial bending　制作若干组 multiple assembly　选择安装 alternative　钻孔 drill　注意 caution

用尖端在凹槽处冲压
use penpoint to press on the dent

蚀刻片零件内侧面向上
Put the part upside down

用笔尖在凹槽处刻
Use penpoint to press on the dent

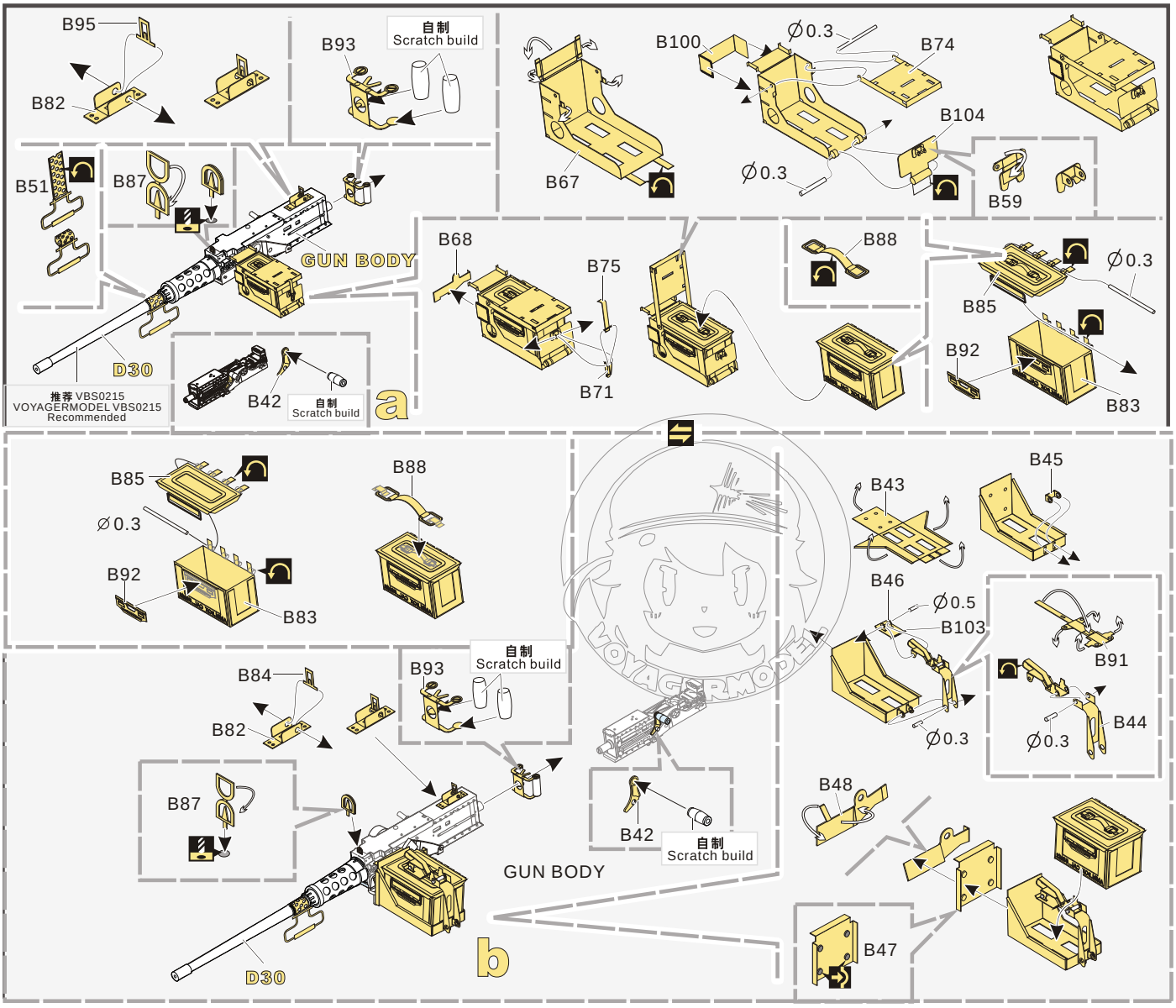

©2003-2026 SHANGHAI VOYAGERMODEL Co.,LTD

1/35 MILITARY MINIATURE VEHICLE UPGRADE SERIES PE351341

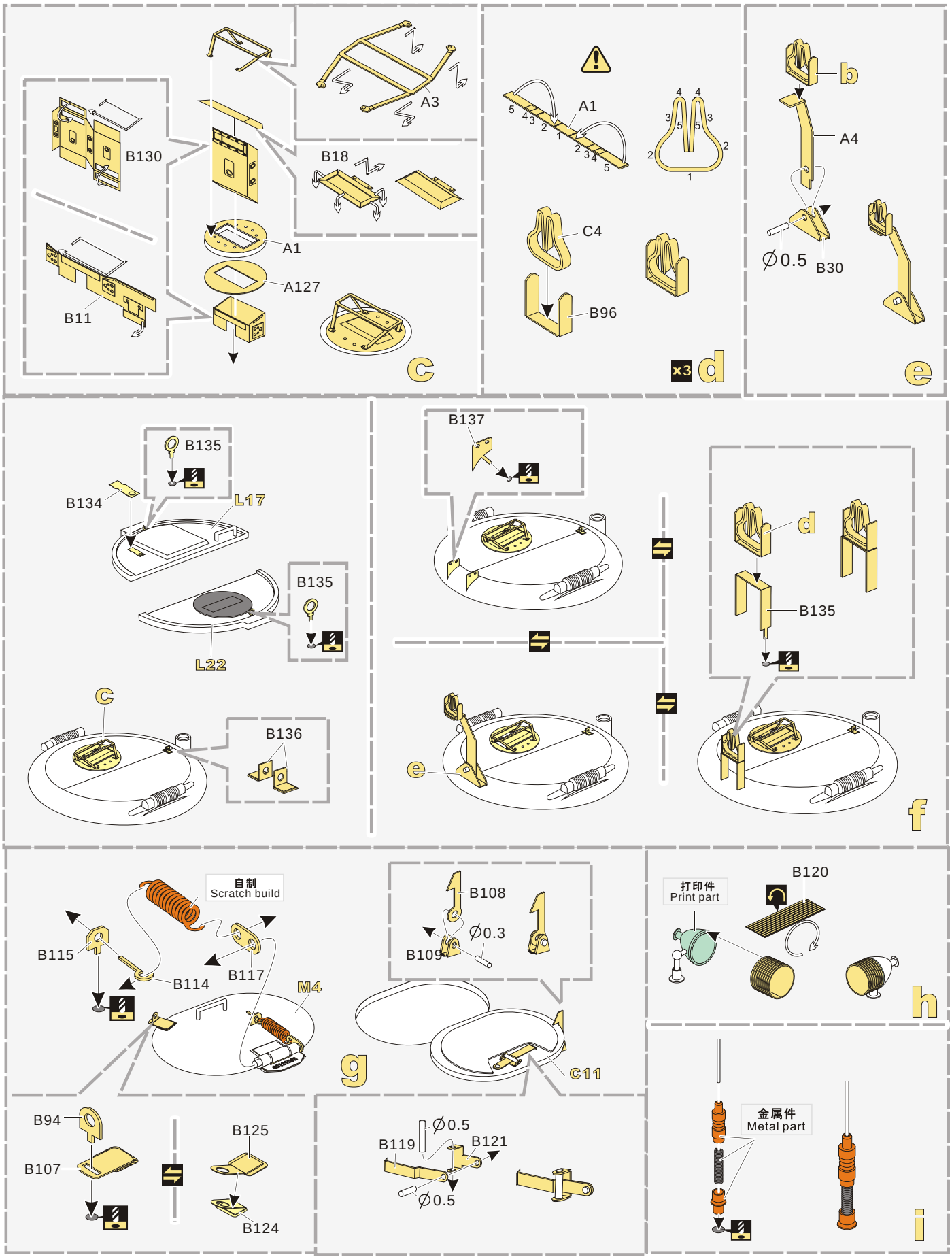

©2003-2026 SHANGHAI VOYAGERMODEL Co.,LTD

1/35 MILITARY MINIATURE VEHICLE UPGRADE SERIES PE351341

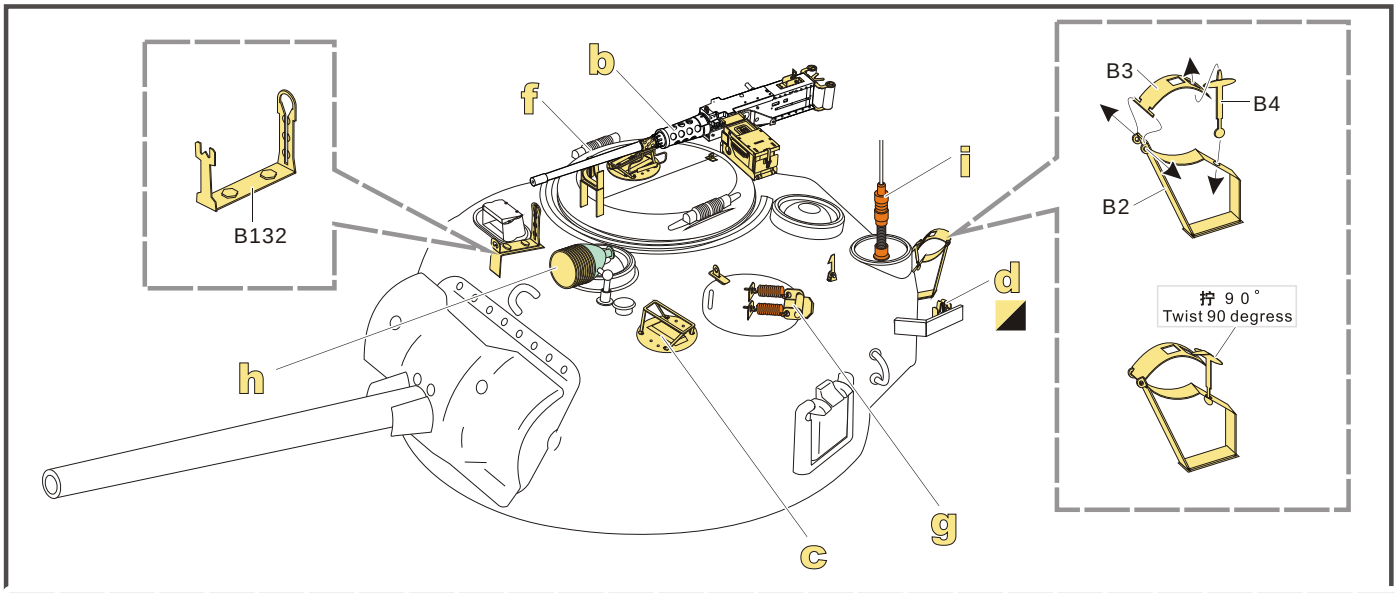

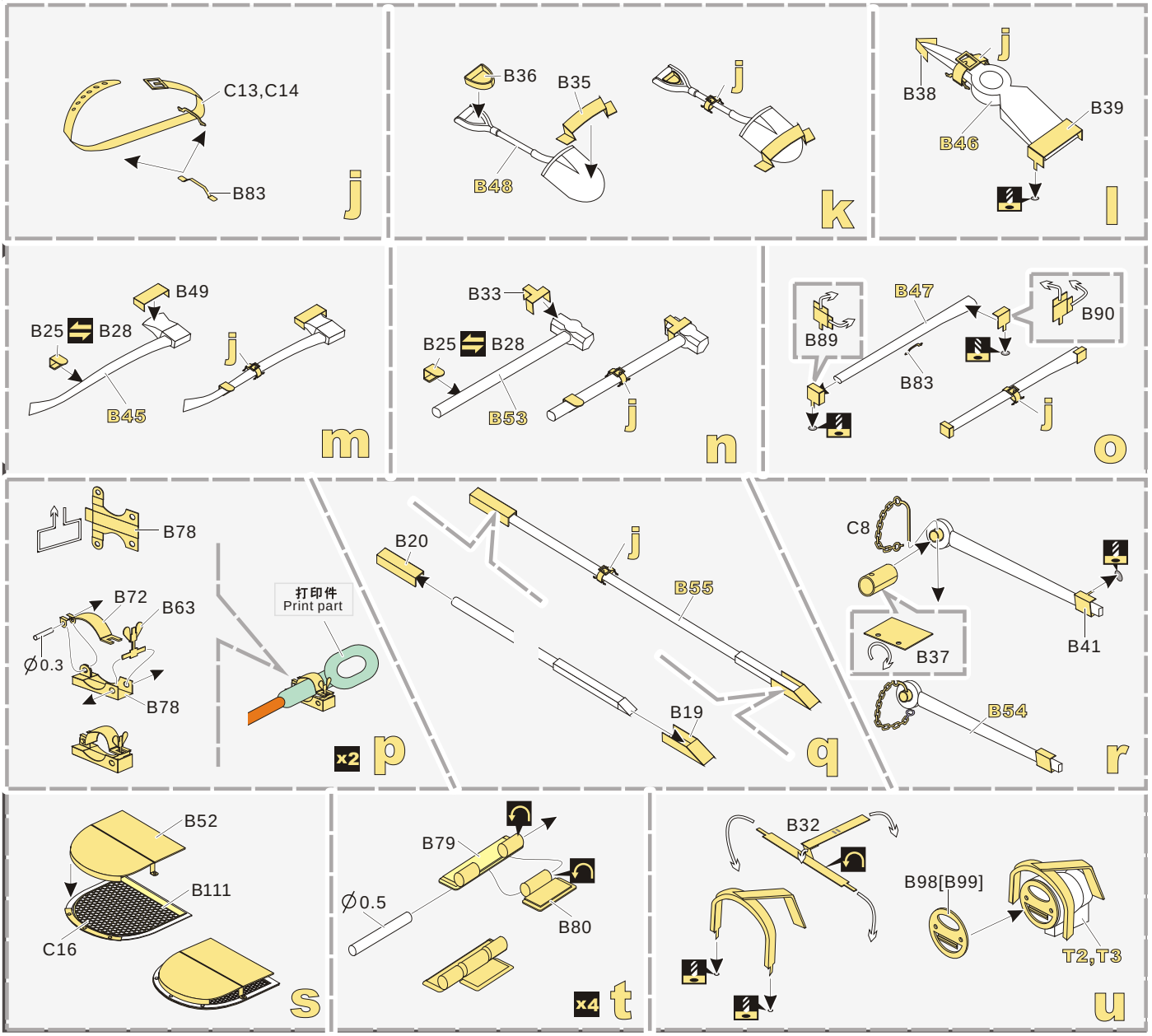

©2003-2026 SHANGHAI VOYAGERMODEL Co.,LTD

1/35 MILITARY MINIATURE VEHICLE UPGRADE SERIES PE351341

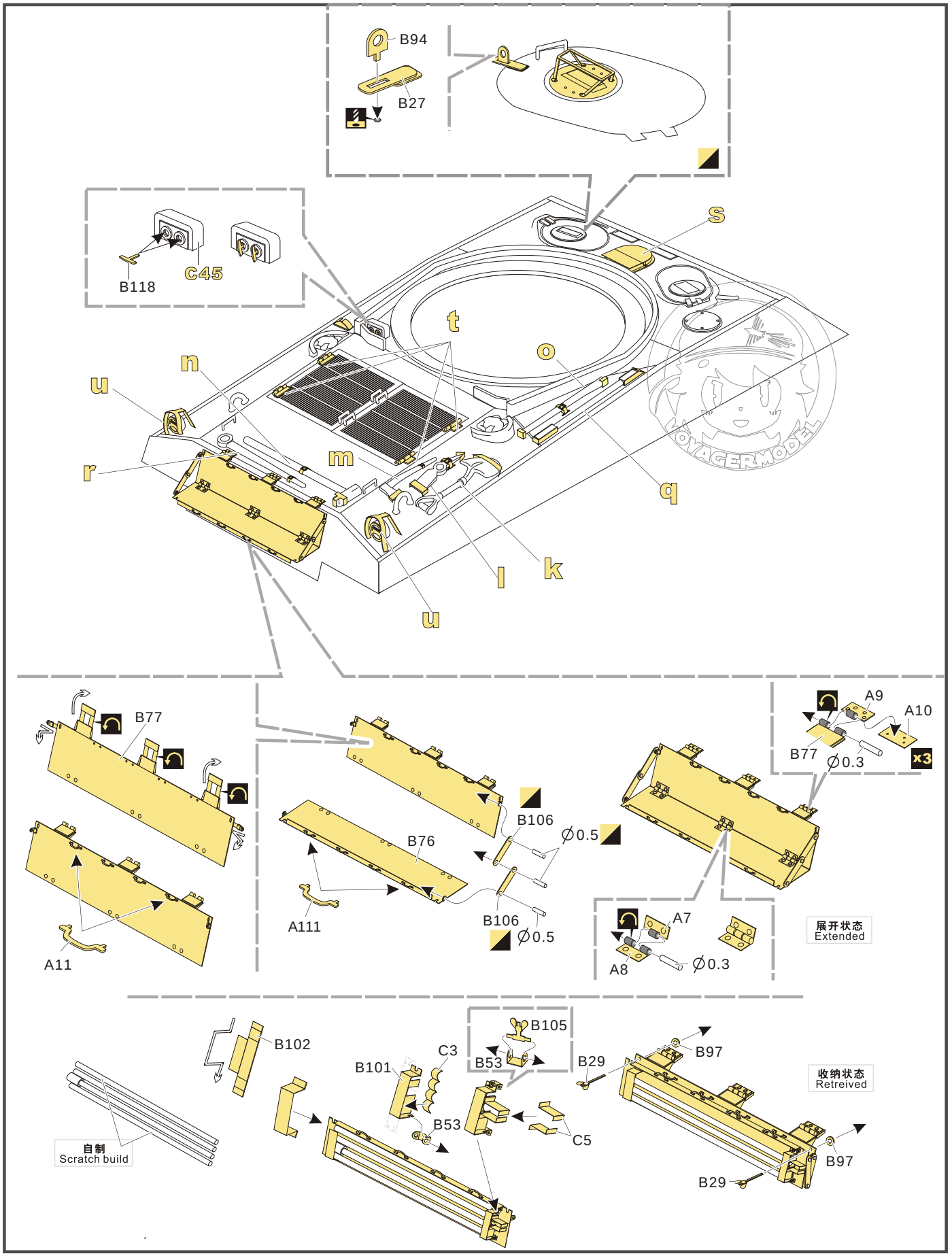

©2003-2026 SHANGHAI VOYAGERMODEL Co.,LTD

1/35 MILITARY MINIATURE VEHICLE UPGRADE SERIES PE351341

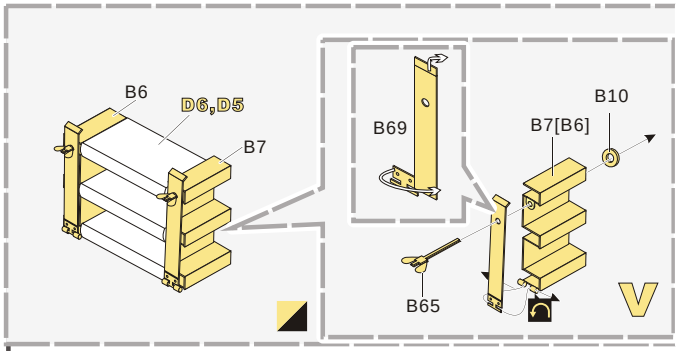

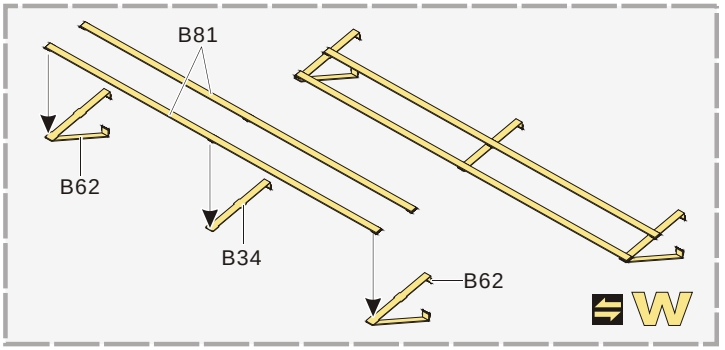

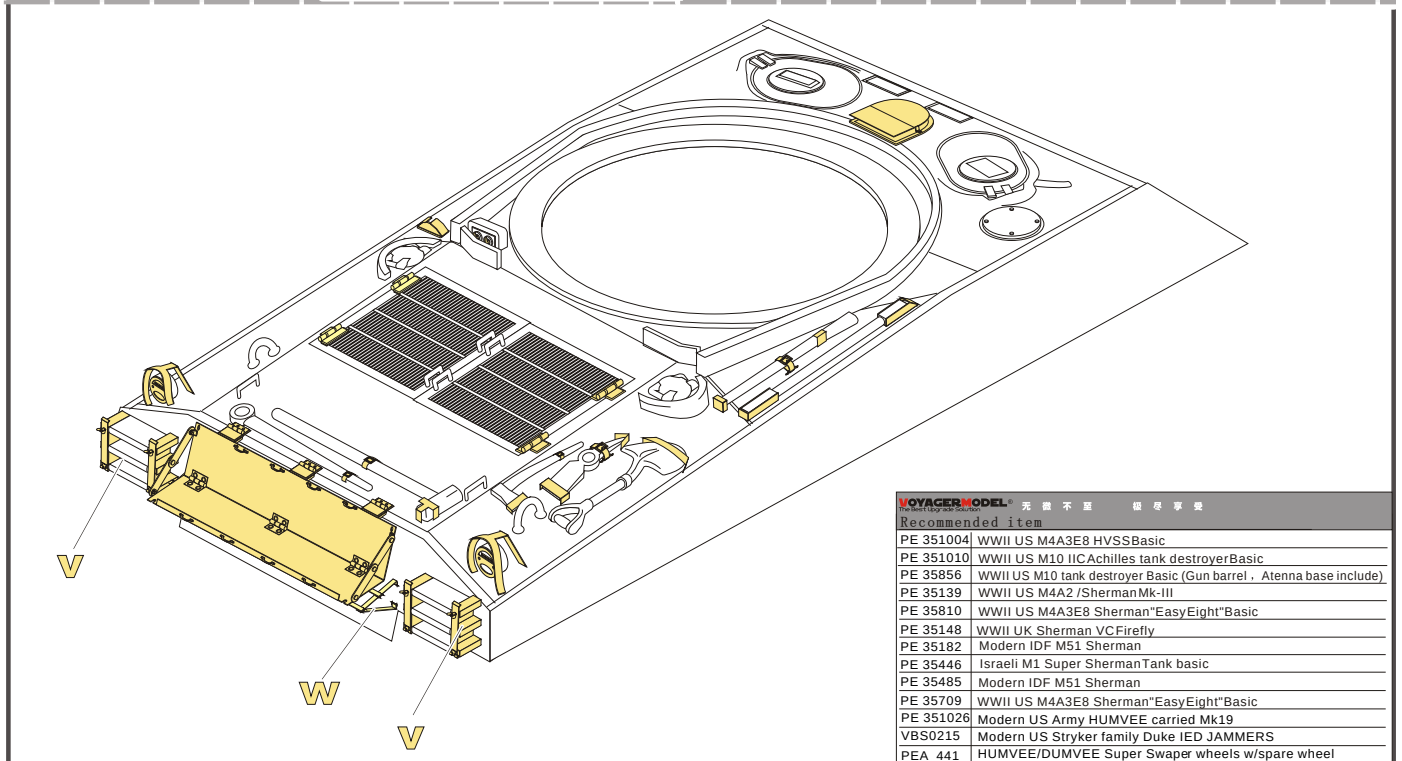

VOYAGERMODEL® The Best Upgrade Solution 无 微 不 至 极 尽 享 受

Recommended item

PE 351004	WWII US M4A3E8 HVSSBasic
PE 351010	WWII US M10 IICAchilles tank destroyerBasic
PE 35856	WWII US M10 tank destroyer Basic (Gun barrel， Atenna base include)
PE 35139	WWII US M4A2 /ShermanMk-III
PE 35810	WWII US M4A3E8 Sherman"EasyEight"Basic
PE 35148	WWII UK Sherman VCFirefly
PE 35182	Modern IDF M51 Sherman
PE 35446	Israeli M1 Super ShermanTank basic
PE 35485	Modern IDF M51 Sherman
PE 35709	WWII US M4A3E8 Sherman"EasyEight"Basic
PE 351026	Modern US Army HUMVEE carried Mk19
VBS0215	Modern US Stryker family Duke IED JAMMERS
PEA 441	HUMVEE/DUMVEE Super Swaper wheels w/spare wheel

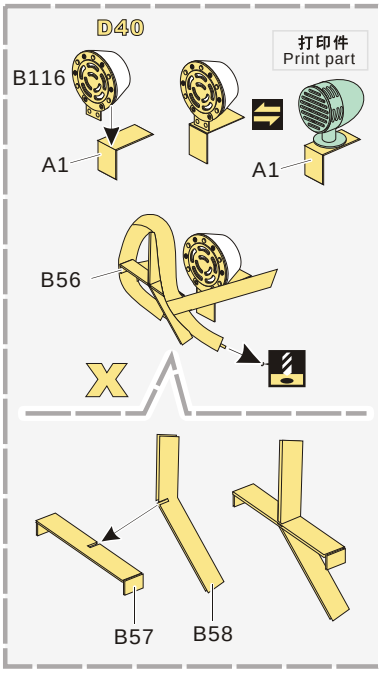

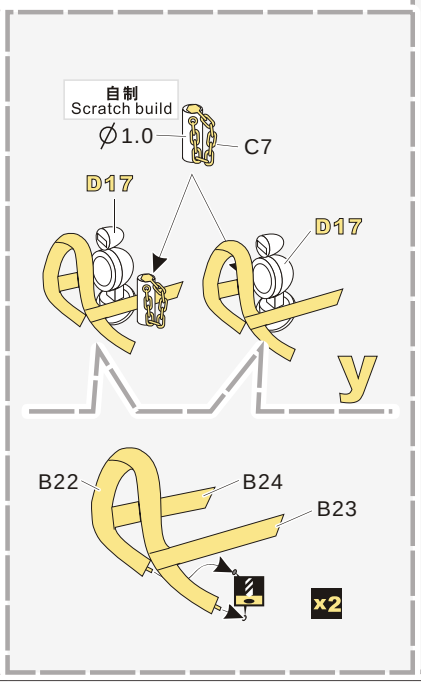

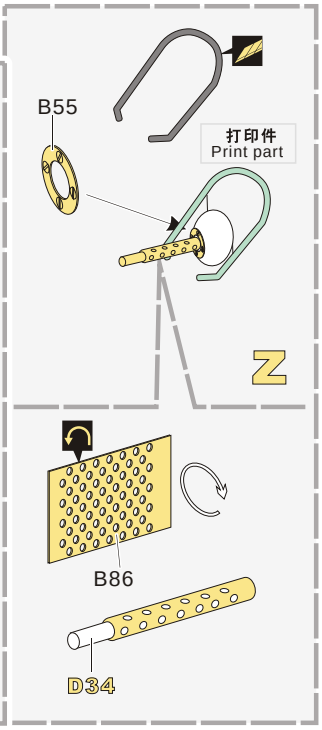

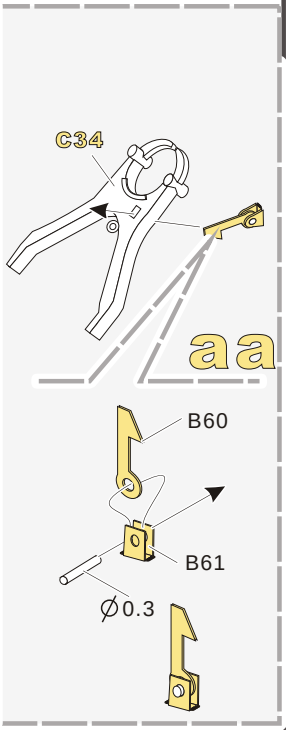

©2003-2026 SHANGHAI VOYAGERMODEL Co.,LTD

1/35 MILITARY MINIATURE VEHICLE UPGRADE SERIES PE351341

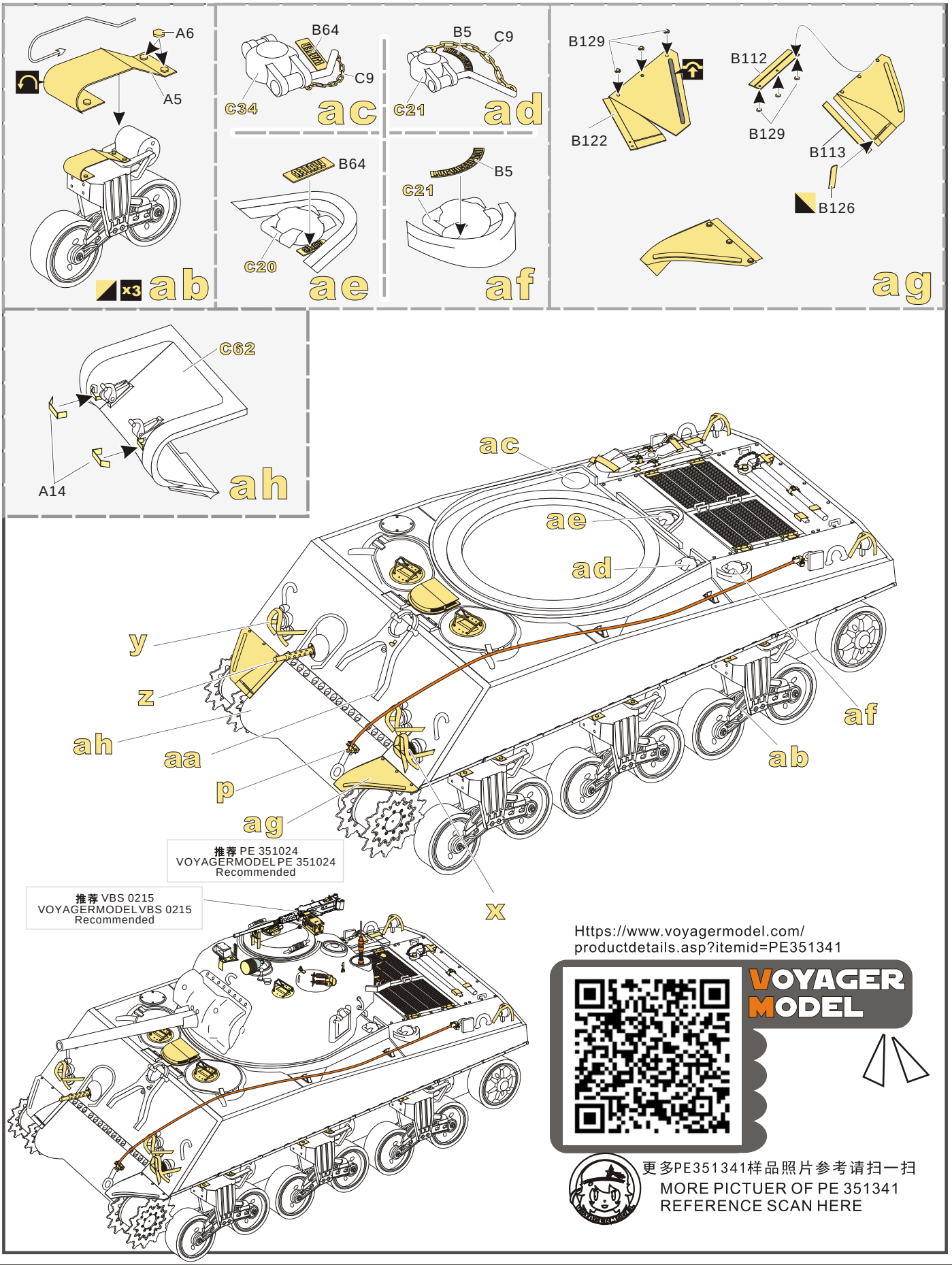

推荐 PE 351024
VOYAGERMODEL PE 351024
Recommended

推荐 VBS 0215
VOYAGERMODEL VBS 0215
Recommended

Https://www.voyagermodel.com/
productdetails.asp?itemid=PE351341

VOYAGER MODEL

更多PE351341样品照片参考请扫一扫
MORE PICTUER OF PE 351341
REFERENCE SCAN HERE

©2003-2026 SHANGHAI VOYAGERMODEL Co.,LTD