1/35 MILITARY MINIATURE VEHICLE UPGRADE SERIES PE 351484

WWII German 3.7cm FlaK43 auf Fahrgestell Pz.Kpfw.III Ausf.M(Versuchsaufbau) Basic Upgrade Set（included Demeged Road Wheels）(B ver.Gun barrel Includ）)

二战德军三号M型 东风炮塔防空坦克基本改造件带战损路轮（B版本含炮管）

[For DRAGON6771]

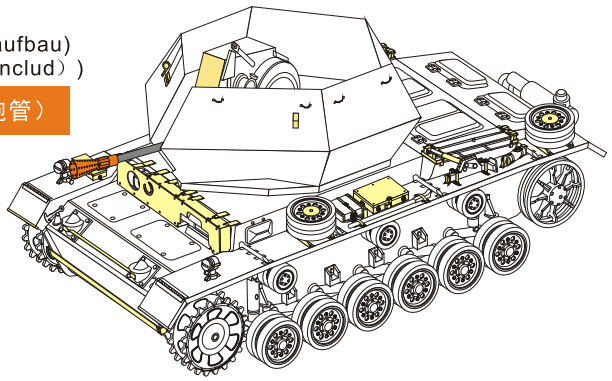

■推荐使用工具 RECOMMENDED TOOLS

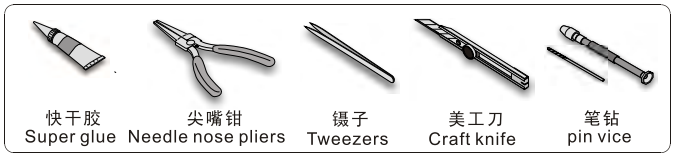

安装 install　折叠 bend　A1 改造件零件编号 PE/resin part number　B12 原零件编号 kit part number　C22 被替换的原零件编号 replaced kit part number　另一侧相同制作 repeat on opposite side

切除 remove　打磨 grind off　弧度卷曲 radial bending　x2 制作若干组 multiple assembly　选择安装 alternative　用铜管制作 make from brass tube

用尖端在凹槽处冲压
use penpoint to press on the dent

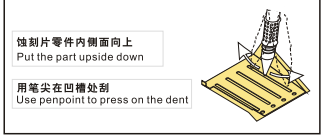

THE STEPS IN THE BLACK BOX APPLY FOR Pe351484 B VERSION
黑框内的步骤仅适用于PE351484 B版本

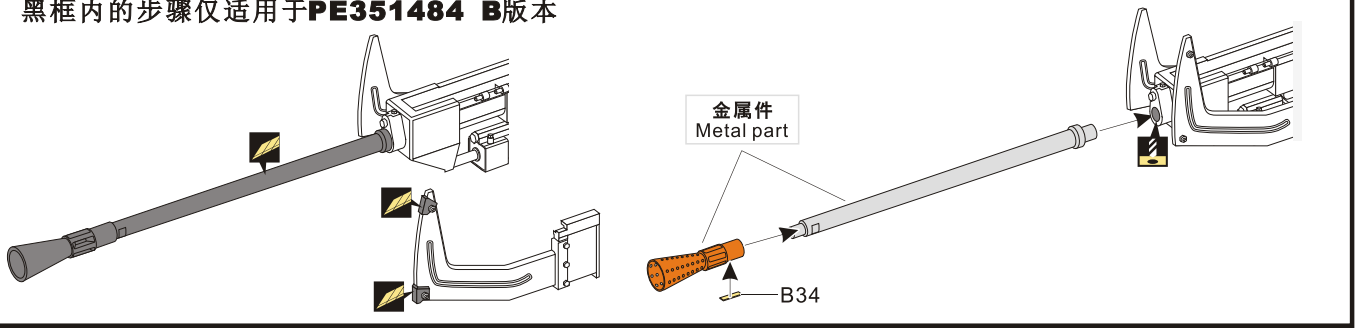

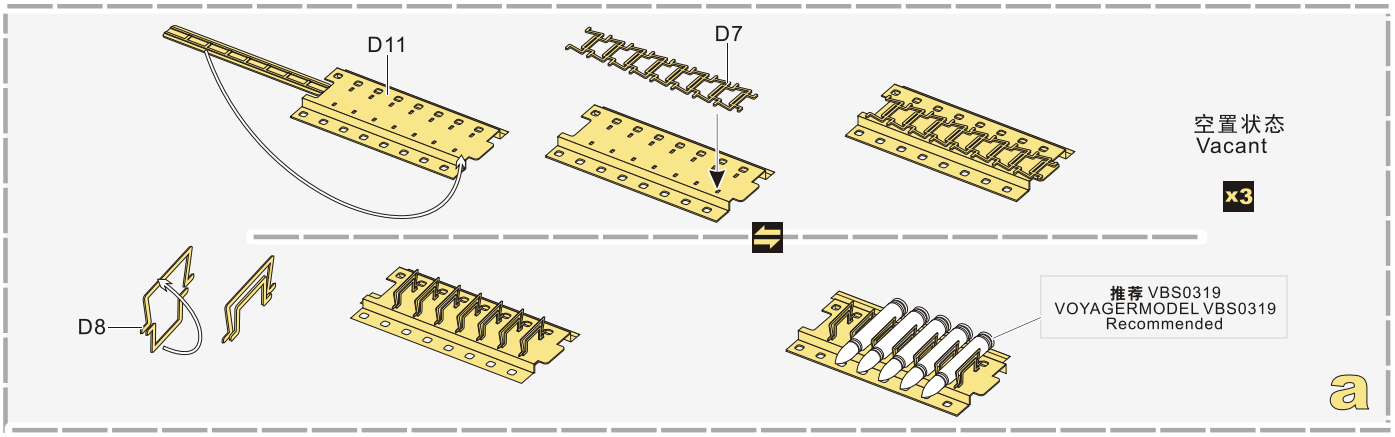

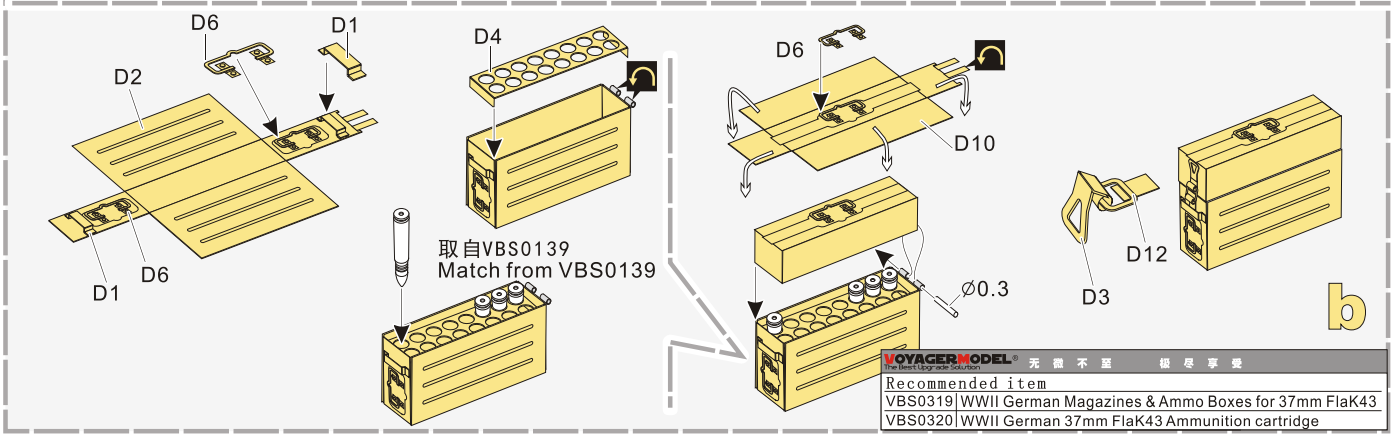

Recommended item	
VBS0319	WWII German Magazines & Ammo Boxes for 37mm FlaK43
VBS0320	WWII German 37mm FlaK43 Ammunition cartridge

©2003-2026 SHANGHAI VOYAGERMODEL Co.,LTD

1/35 MILITARY MINIATURE VEHICLE UPGRADE SERIES PE351484

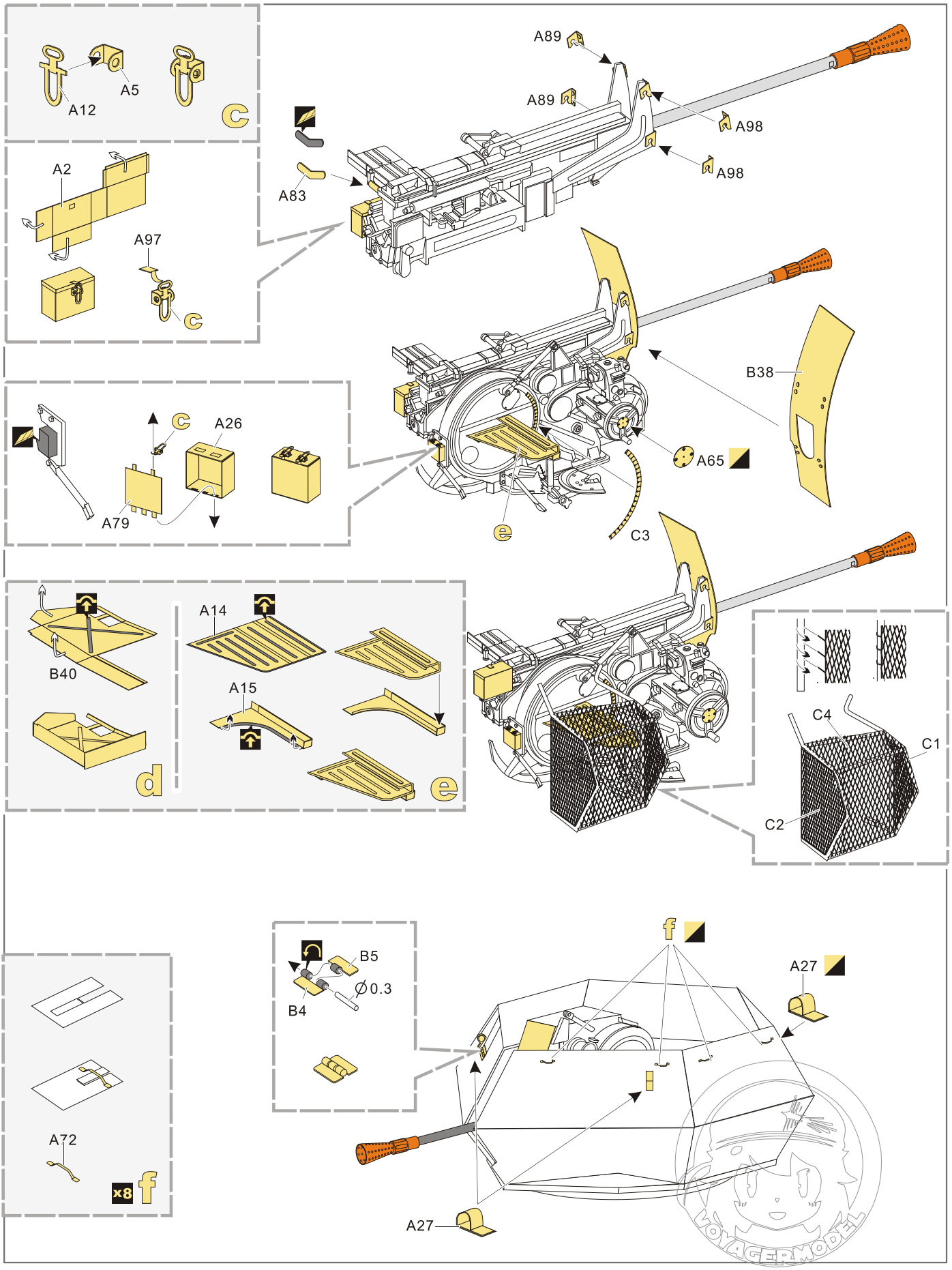

©2003-2026 SHANGHAI VOYAGERMODEL Co.,LTD

1/35 MILITARY MINIATURE VEHICLE UPGRADE SERIES PE351484

漏喷板使用说明:
Instruction:

未上色零件
Unpainted part

喷橡胶黑
spray tyre black

使用遮喷板为轮毂喷上所需要的颜色
use template to paint required hub colour

g

A3, A4
B24
x2
h

A57 A46 A88
i

A57 A46 A92
j

i A33 A63 A6
k

A34 A30
j
l

i A16 B13 A36 A52 A24 A10 A23
m

A8 j A17 A84
n

i A25
o

A55 A82 A48 A53 A49
自制 Scratch build
p

A99 G49,G50, G52 A56 Ø0.5 Ø0.3 A20 Ø1.0 A44 A29 A64
q

A9 A14 A9 A3 A73 B15
x2

A79 A51 A18 A69 A70 A17,A19
x2
r

A37 A40 Ø0.3 A39 A76 A42 A39
s

A2 A5
x2

A28 A29 D47 B3 A47 B33 Bosch A67
x2
t

©2003-2026 SHANGHAI VOYAGERMODEL Co.,LTD

1/35 MILITARY MINIATURE VEHICLE UPGRADE SERIES PE351484

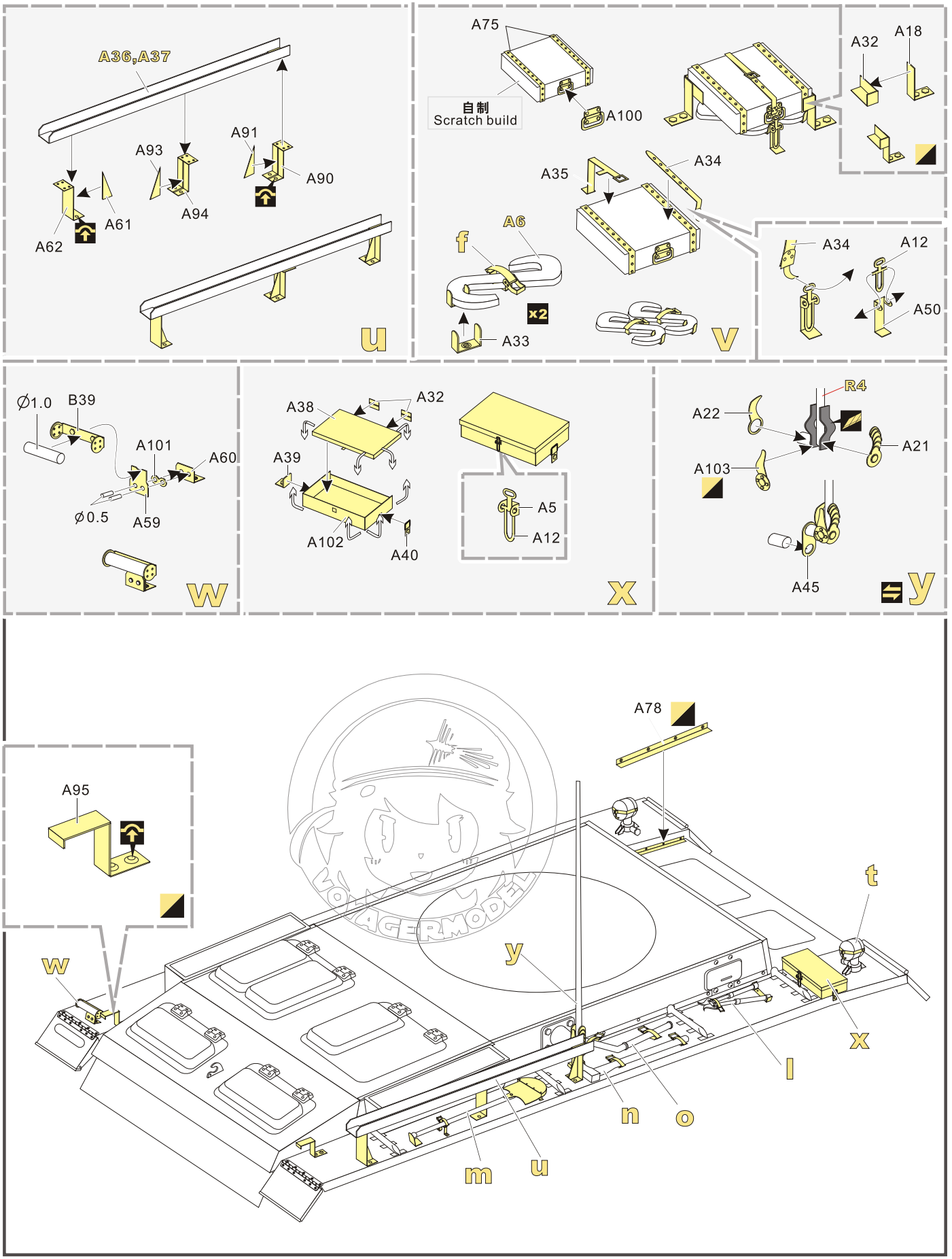

©2003-2026 SHANGHAI VOYAGERMODEL Co.,LTD

1/35 MILITARY MINIATURE VEHICLE UPGRADE SERIES PE351484

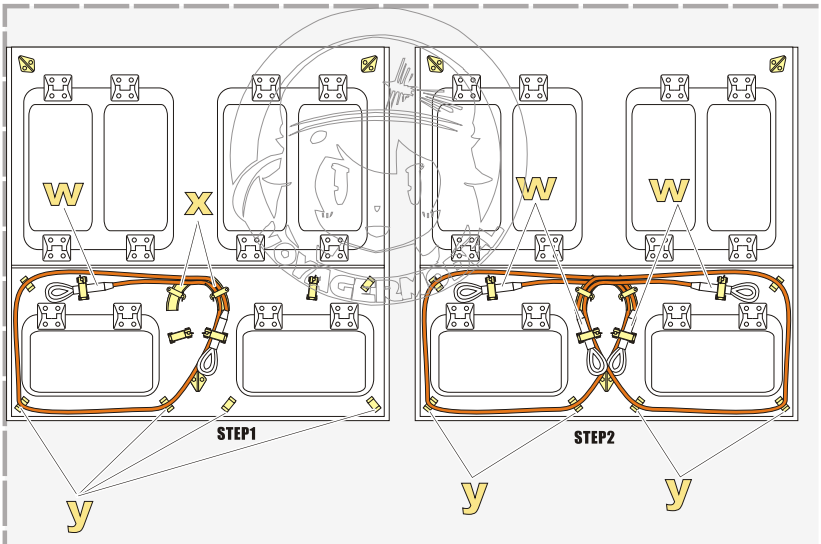

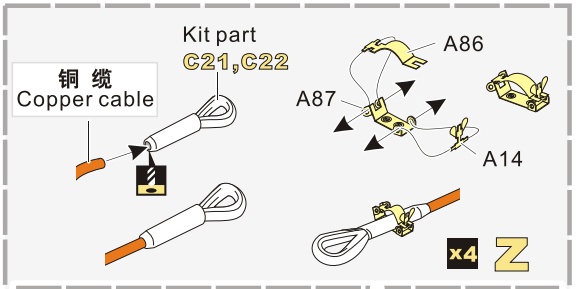

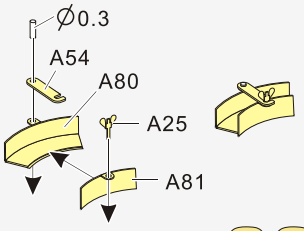

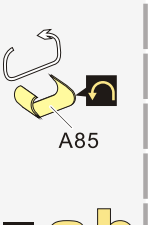

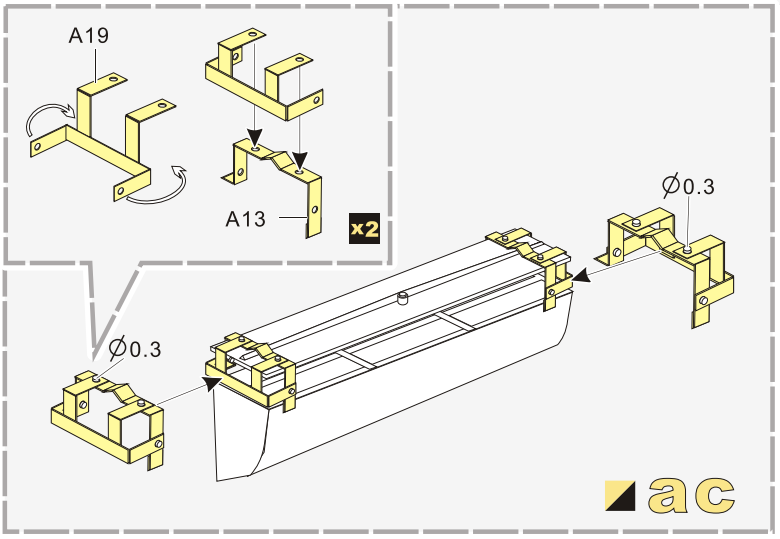

Https://www.voyagermodel.com/
productdetails.asp?itemid=PE351484

VOYAGER MODEL

更多PE351484样品照片参考请扫一扫
MORE PICTUER OF PE 351484
REFERENCE SCAN HERE

车体正面附加装甲制作
Front armour plate assembly

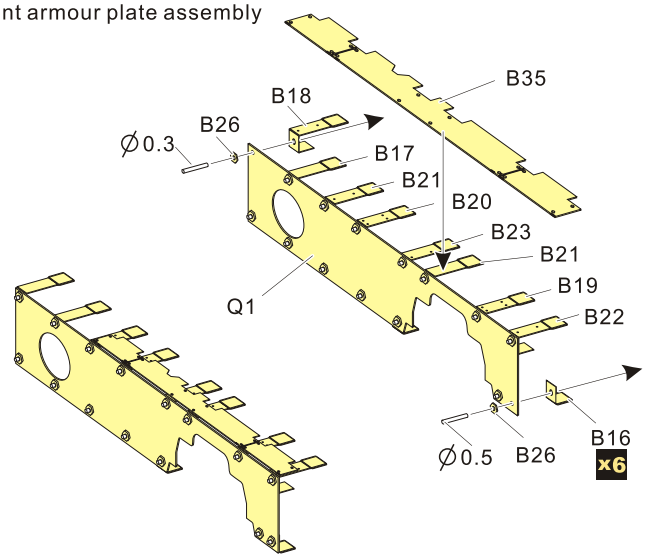

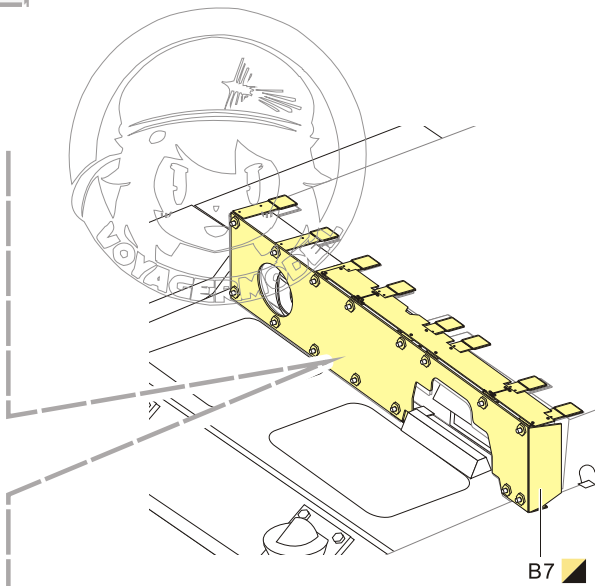

©2003-2026 SHANGHAI VOYAGERMODEL Co.,LTD

1/35 MILITARY MINIATURE VEHICLE UPGRADE SERIES PE351484

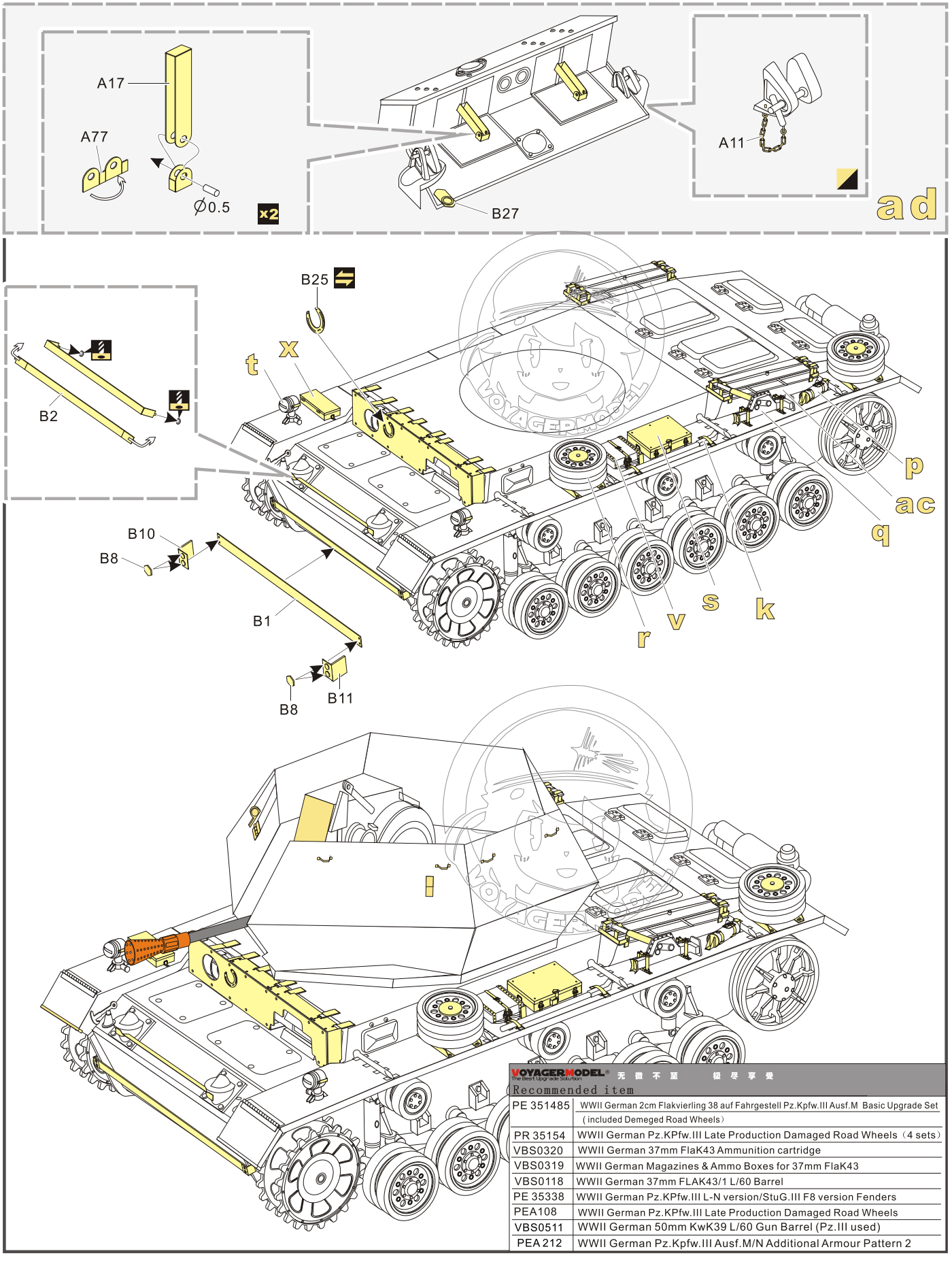

Recommended item	
PE 351485	WWII German 2cm Flakvierling 38 auf Fahrgestell Pz.Kpfw.III Ausf.M Basic Upgrade Set (included Demeged Road Wheels)
PR 35154	WWII German Pz.KPfw.III Late Production Damaged Road Wheels（4 sets）
VBS0320	WWII German 37mm FlaK43 Ammunition cartridge
VBS0319	WWII German Magazines & Ammo Boxes for 37mm FlaK43
VBS0118	WWII German 37mm FLAK43/1 L/60 Barrel
PE 35338	WWII German Pz.KPfw.III L-N version/StuG.III F8 version Fenders
PEA108	WWII German Pz.KPfw.III Late Production Damaged Road Wheels
VBS0511	WWII German 50mm KwK39 L/60 Gun Barrel (Pz.III used)
PEA 212	WWII German Pz.Kpfw.III Ausf.M/N Additional Armour Pattern 2

©2003-2026 SHANGHAI VOYAGERMODEL Co.,LTD