1/35 MILITARY MINIATURE VEHICLE UPGRADE SERIES PE351485

WWII German 2cm Flakvierling 38 auf Fahrgestell Pz.Kpfw.III Ausf.M Basic Upgrade Set（included Demeged Road Wheels）

二战德军三号M型 旋风炮塔防空坦克基本改造件带战损路轮（B版本含炮弹）

[For DRAGON 6778]

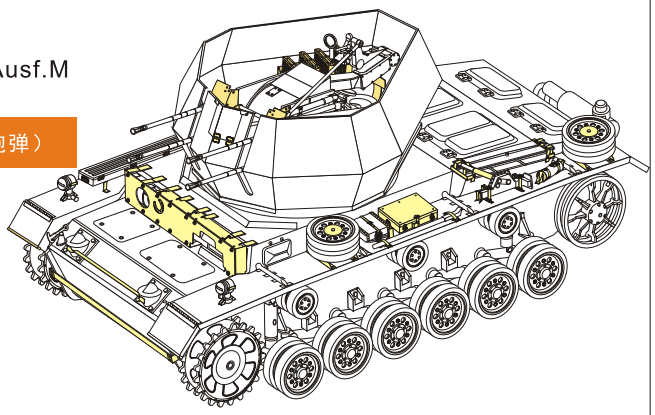

■推荐使用工具 RECOMMENDED TOOLS

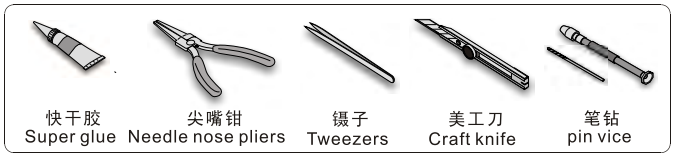

安装 install　折叠 bend　A1 改造件零件编号 PE/resin part number　B12 原零件编号 kit part number　C22 被替换的原零件编号 replaced kit part number　另一侧相同制作 repeat on opposite side

切除 remove　打磨 grind off　弧度卷曲 radial bending　x2 制作若干组 multiple assembly　选择安装 alternative　用铜管制作 make from brass tube　用胶棒制作 make from plastic rod

用尖端在凹槽处冲压 use penpoint to press on the dent

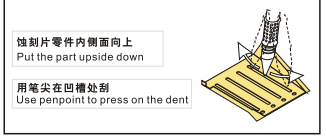

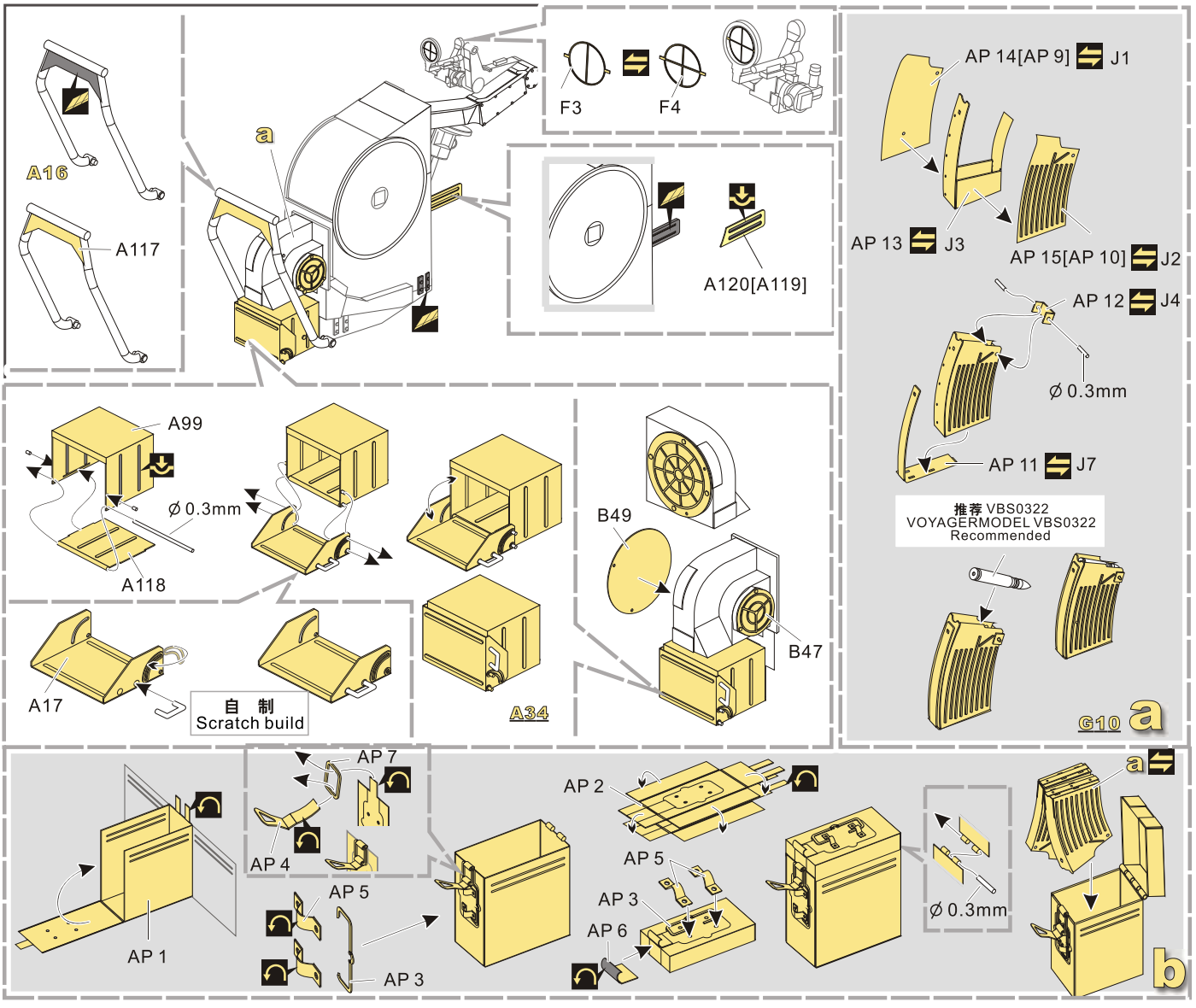

©2003-2026 SHANGHAI VOYAGERMODEL Co.,LTD

1/35 MILITARY MINIATURE VEHICLE UPGRADE SERIES PE351485

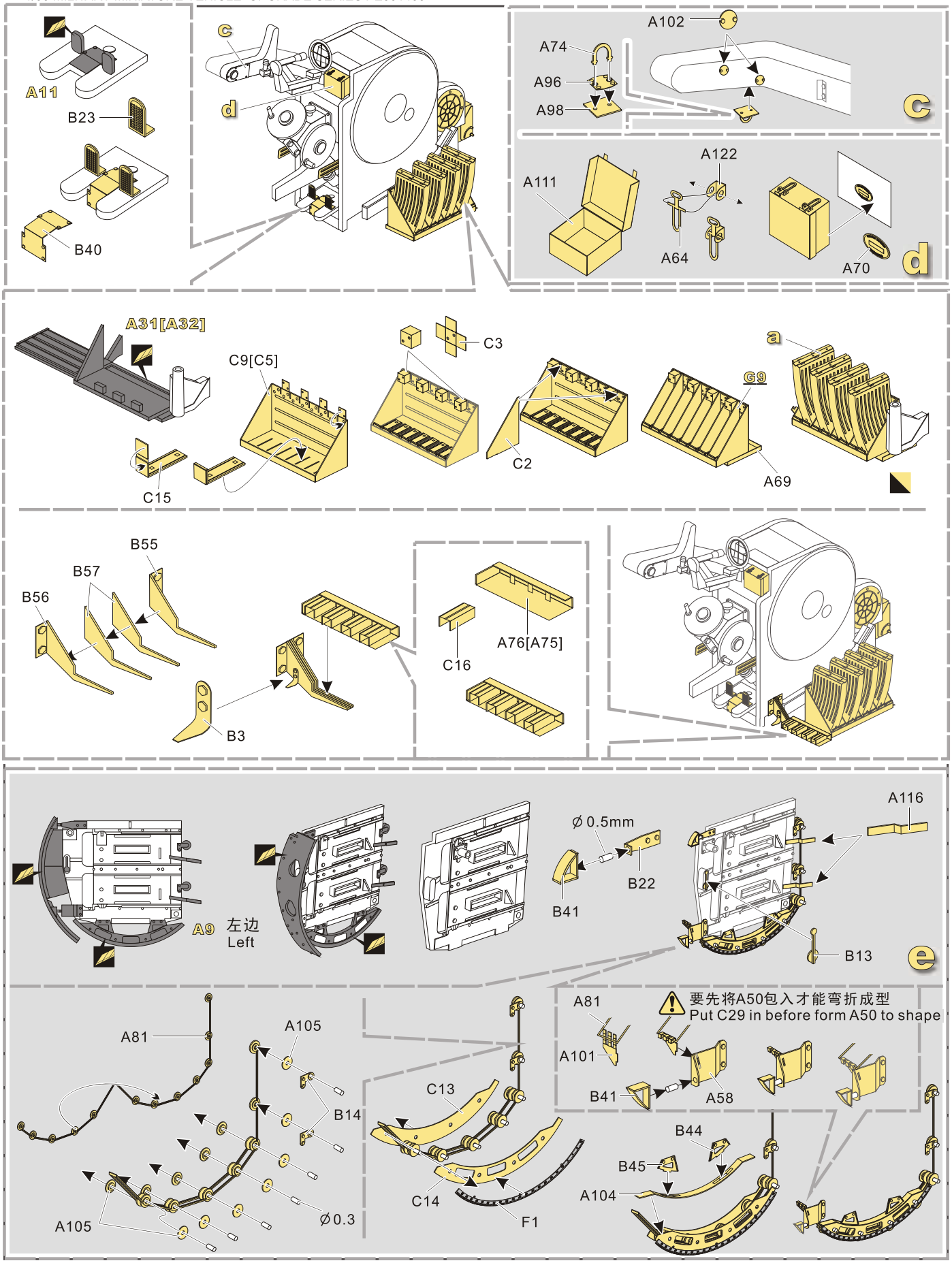

©2003-2026 SHANGHAI VOYAGERMODEL Co.,LTD

1/35 MILITARY MINIATURE VEHICLE UPGRADE SERIES PE351485

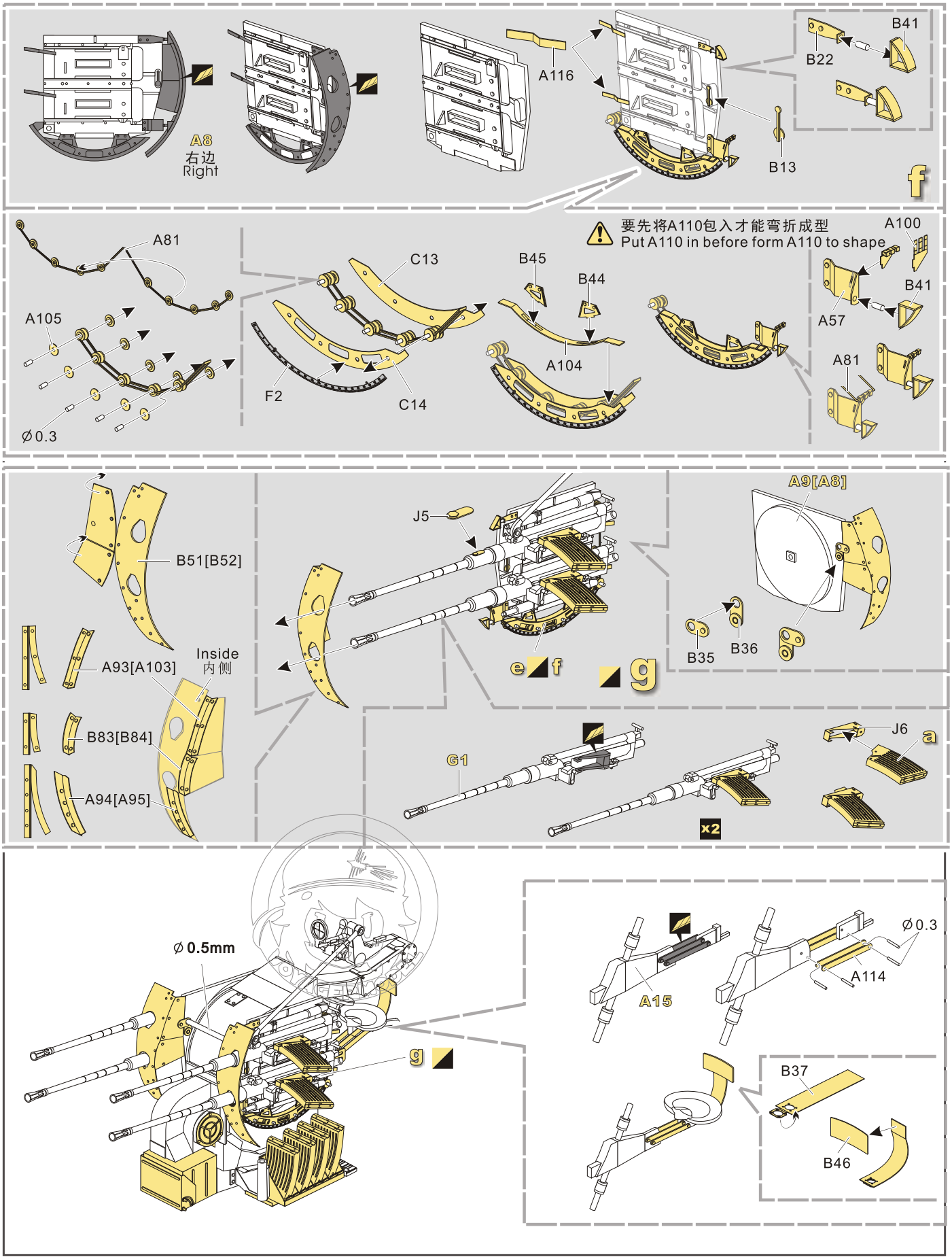

©2003-2026 SHANGHAI VOYAGERMODEL Co.,LTD

1/35 MILITARY MINIATURE VEHICLE UPGRADE SERIES PE351485

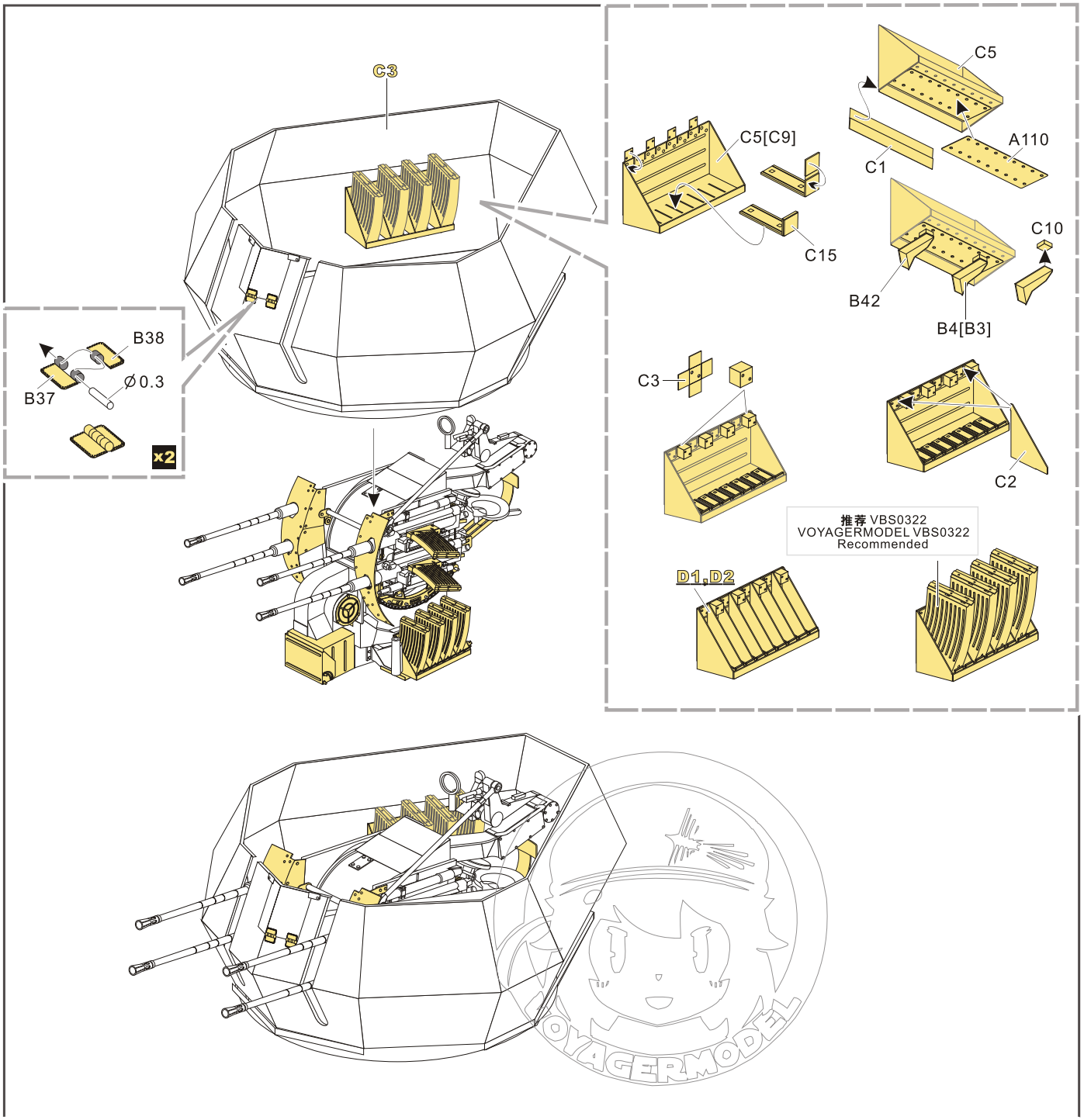

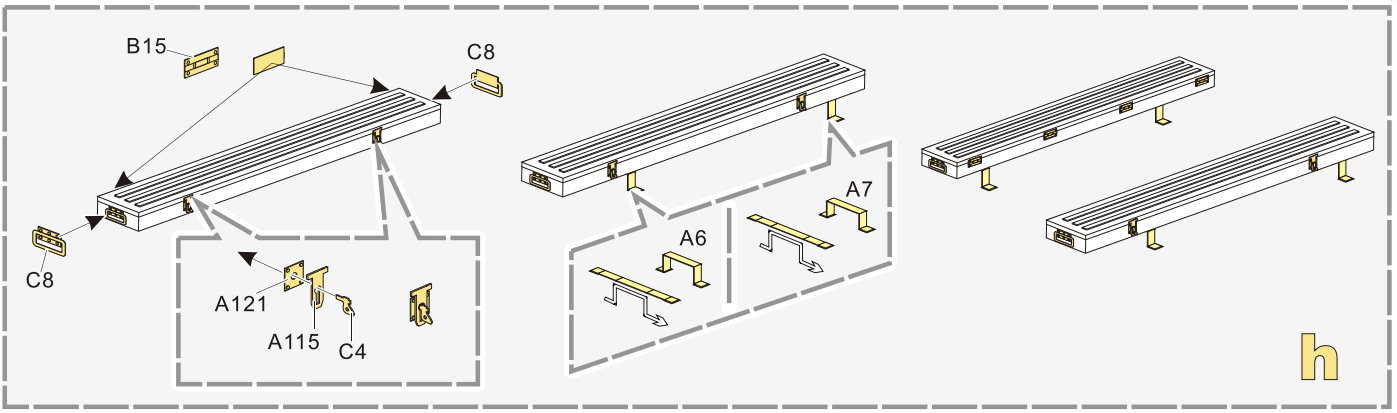

©2003-2026 SHANGHAI VOYAGERMODEL Co.,LTD

1/35 MILITARY MINIATURE VEHICLE UPGRADE SERIES PE351485

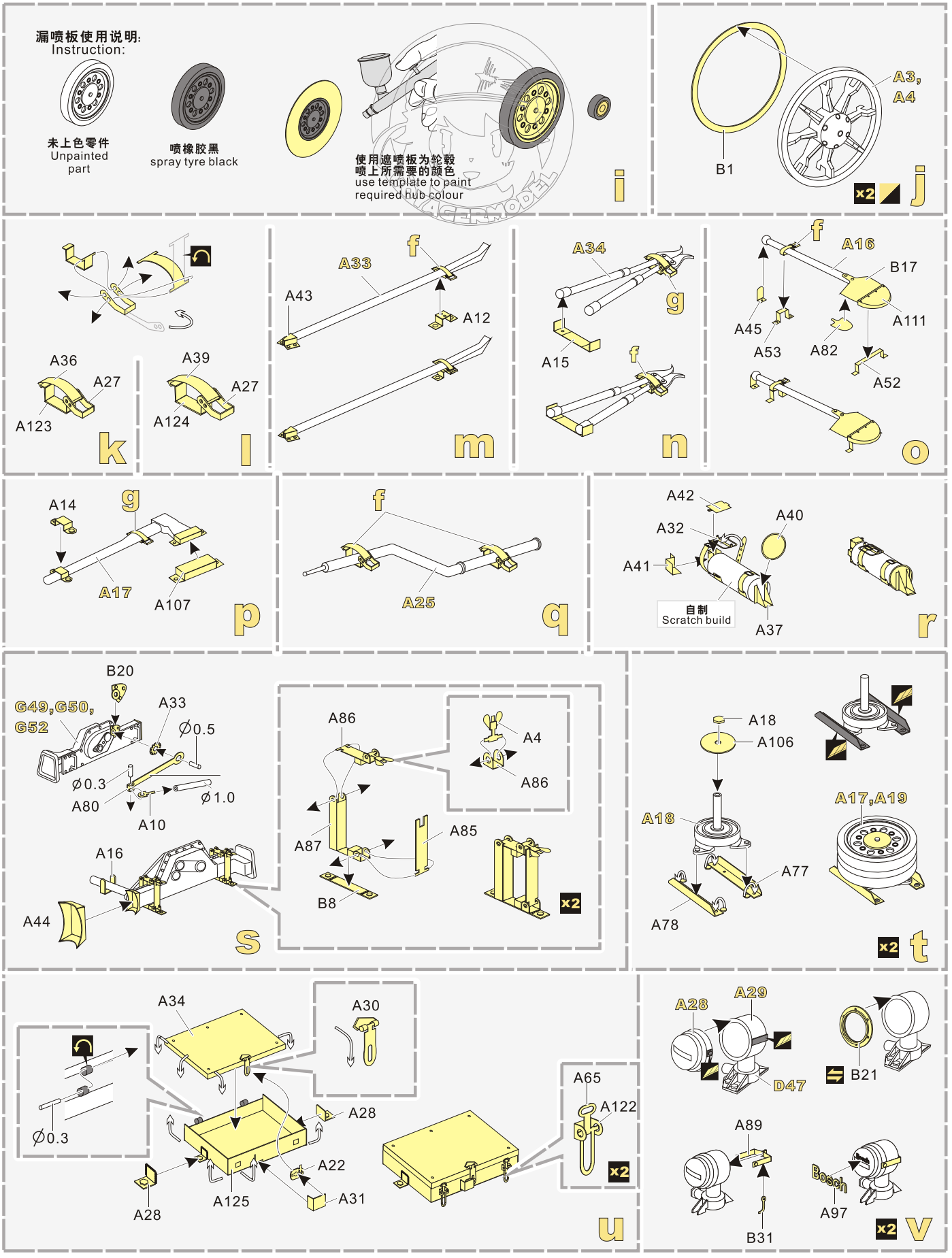

©2003-2026 SHANGHAI VOYAGERMODEL Co.,LTD

1/35 MILITARY MINIATURE VEHICLE UPGRADE SERIES PE351485

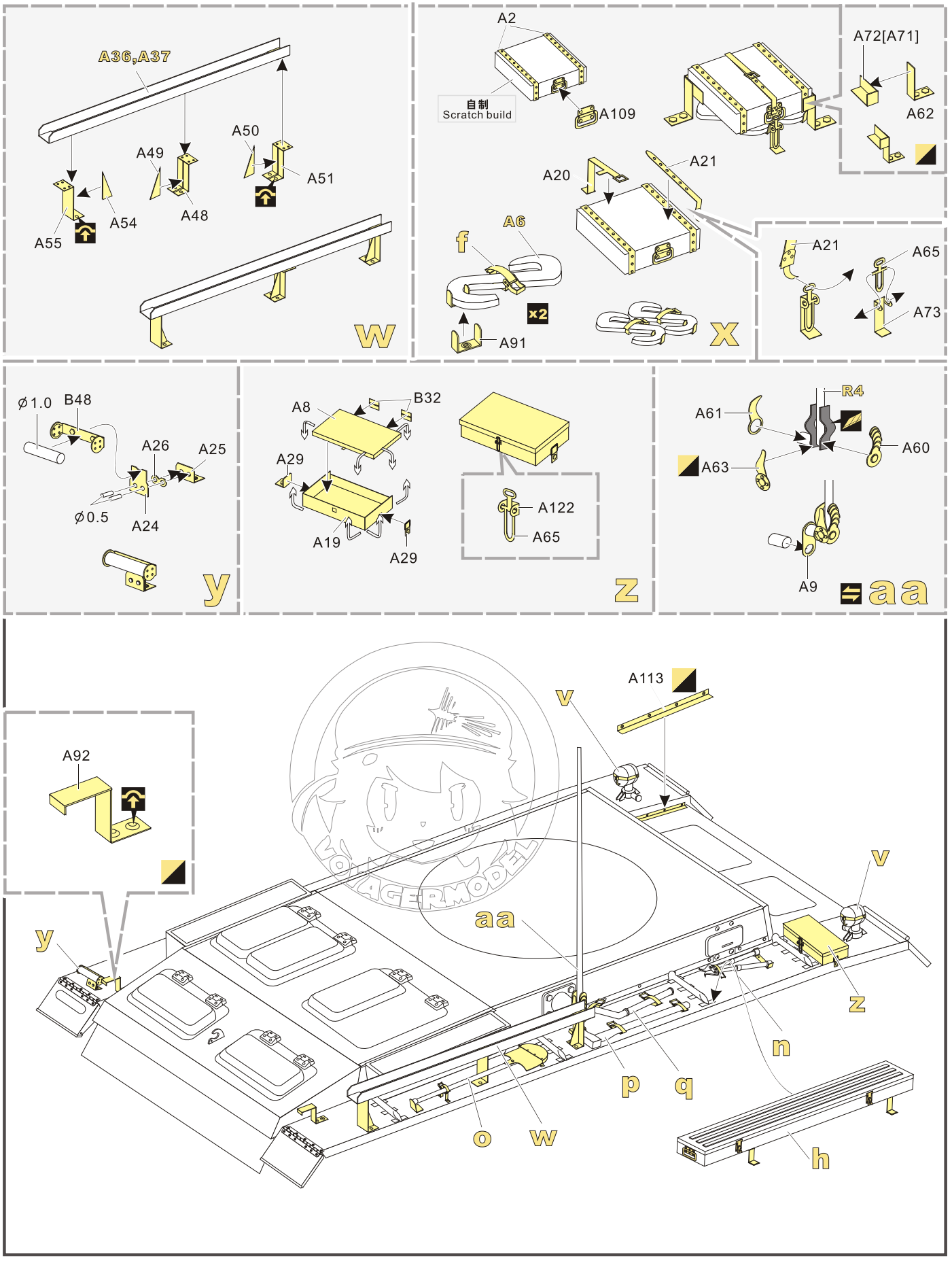

©2003-2026 SHANGHAI VOYAGERMODEL Co.,LTD

1/35 MILITARY MINIATURE VEHICLE UPGRADE SERIES PE351485

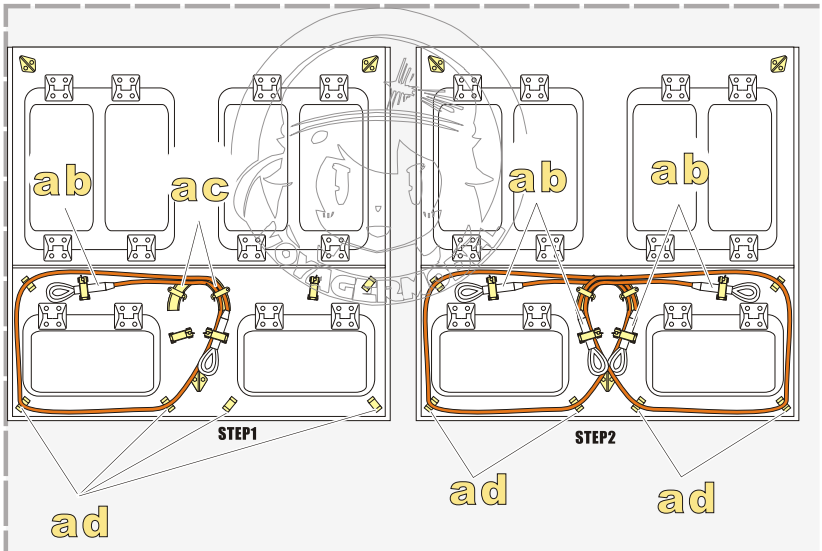

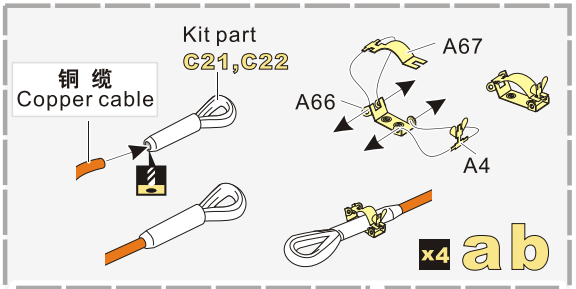

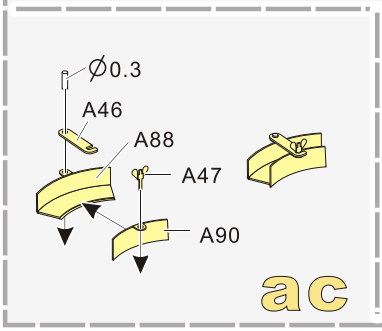

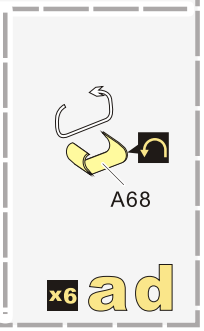

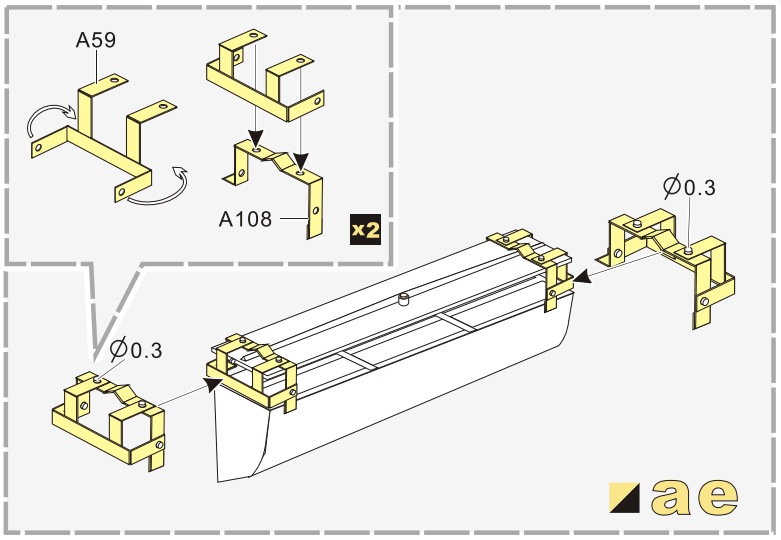

Https://www.voyagermodel.com/
productdetails.asp?itemid=PE351485

VOYAGER MODEL

更多PE351485样品照片参考请扫一扫
MORE PICTUER OF PE 351485
REFERENCE SCAN HERE

车体正面附加装甲制作
Front armour plate assembly

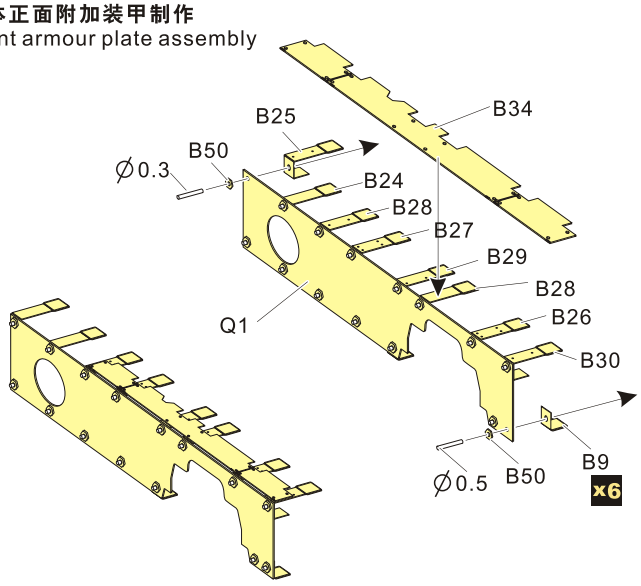

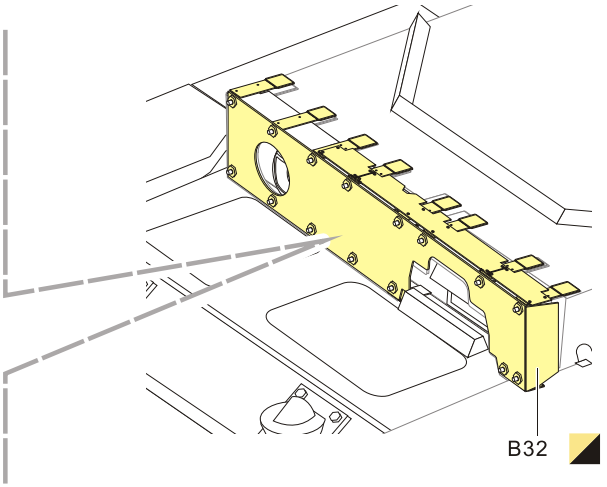

©2003-2026 SHANGHAI VOYAGERMODEL Co.,LTD

1/35 MILITARY MINIATURE VEHICLE UPGRADE SERIES PE351485

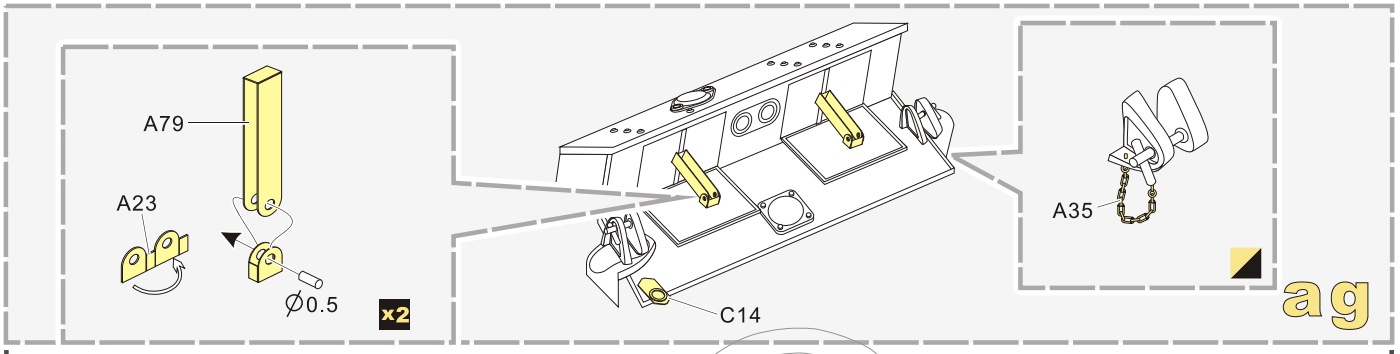

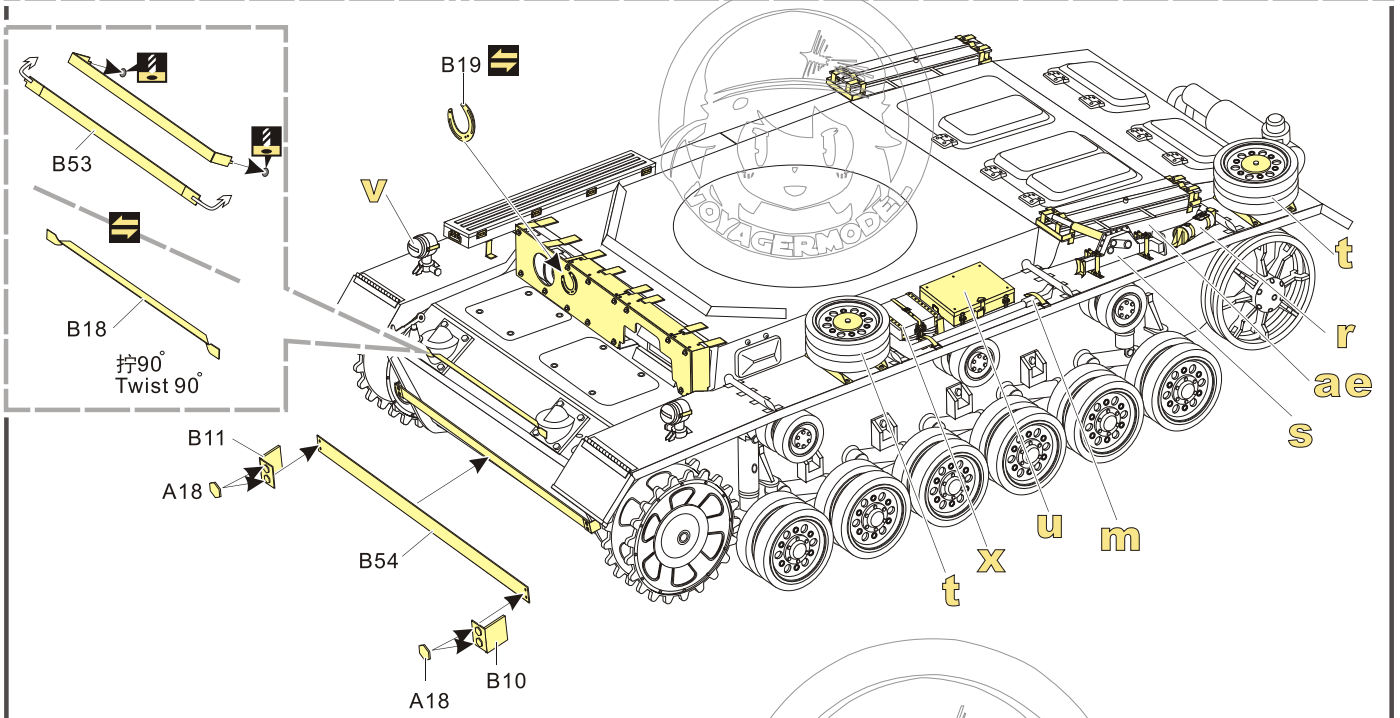

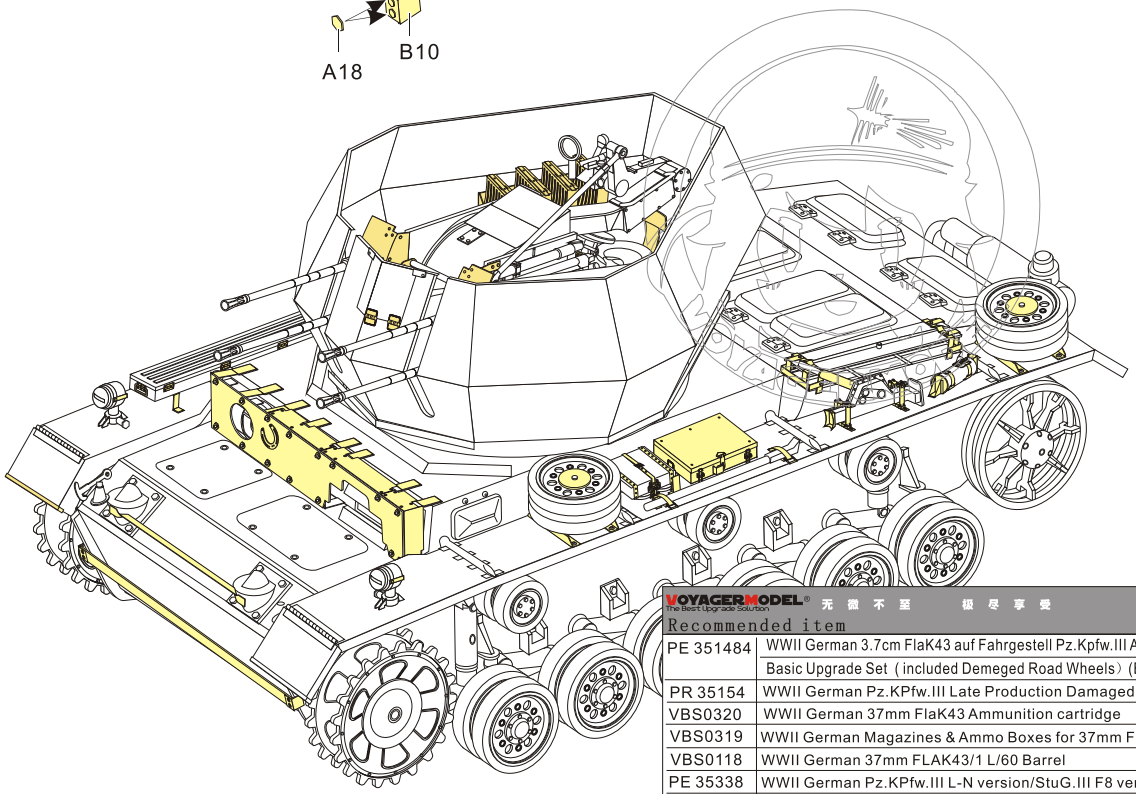

VOYAGERMODEL® The Best Upgrade Solution 无 微 不 至 极 尽 享 受	
Recommended item	
PE 351484	WWII German 3.7cm FlaK43 auf Fahrgestell Pz.Kpfw.III Ausf.M(Versuchsaufbau) Basic Upgrade Set（included Demeged Road Wheels）(B ver.Gun barrel Includ）)
PR 35154	WWII German Pz.KPfw.III Late Production Damaged Road Wheels（4 sets）
VBS0320	WWII German 37mm FlaK43 Ammunition cartridge
VBS0319	WWII German Magazines & Ammo Boxes for 37mm FlaK43
VBS0118	WWII German 37mm FLAK43/1 L/60 Barrel
PE 35338	WWII German Pz.KPfw.III L-N version/StuG.III F8 version Fenders
PEA108	WWII German Pz.KPfw.III Late Production Damaged Road Wheels
VBS0511	WWII German 50mm KwK39 L/60 Gun Barrel (Pz.III used)
PEA 212	WWII German Pz.Kpfw.III Ausf.M/N Additional Armour Pattern 2

©2003-2026 SHANGHAI VOYAGERMODEL Co.,LTD