1/35 MILITARY MINIATURE VEHICLE UPGRADE SERIES PE351555

# WWII German Panzer.IV Ausf.H version basic

## 二战德军IV号坦克H型早期型基本改造件

[For TAKOM 8019]

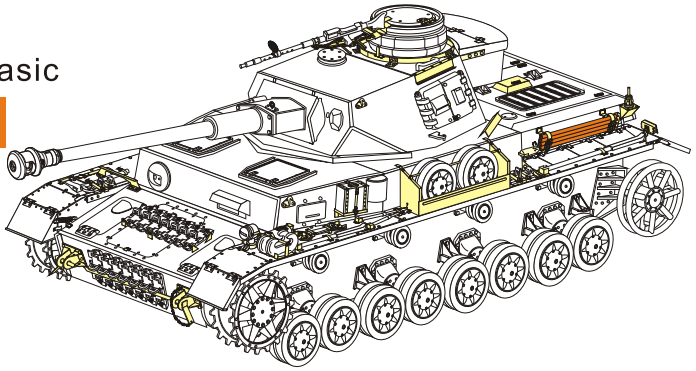

■推荐使用工具 RECOMMENDED TOOLS

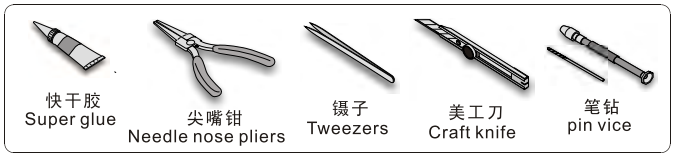


安装 install　折叠 bend　A1 改造件零件编号 PE/resin part number　B12 原零件编号 kit part number　C22 被替换的原零件编号 replaced kit part number　×2 制作若干组 multiple assembly

弧度卷曲 radial bending　选择安装 alternative　切除 remove　钻孔 drill　注意 caution　打磨 grind off　另一侧相同制作 repeat on opposite side

用尖端在凹槽处冲压
use penpoint to press on the dent

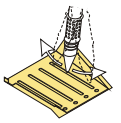


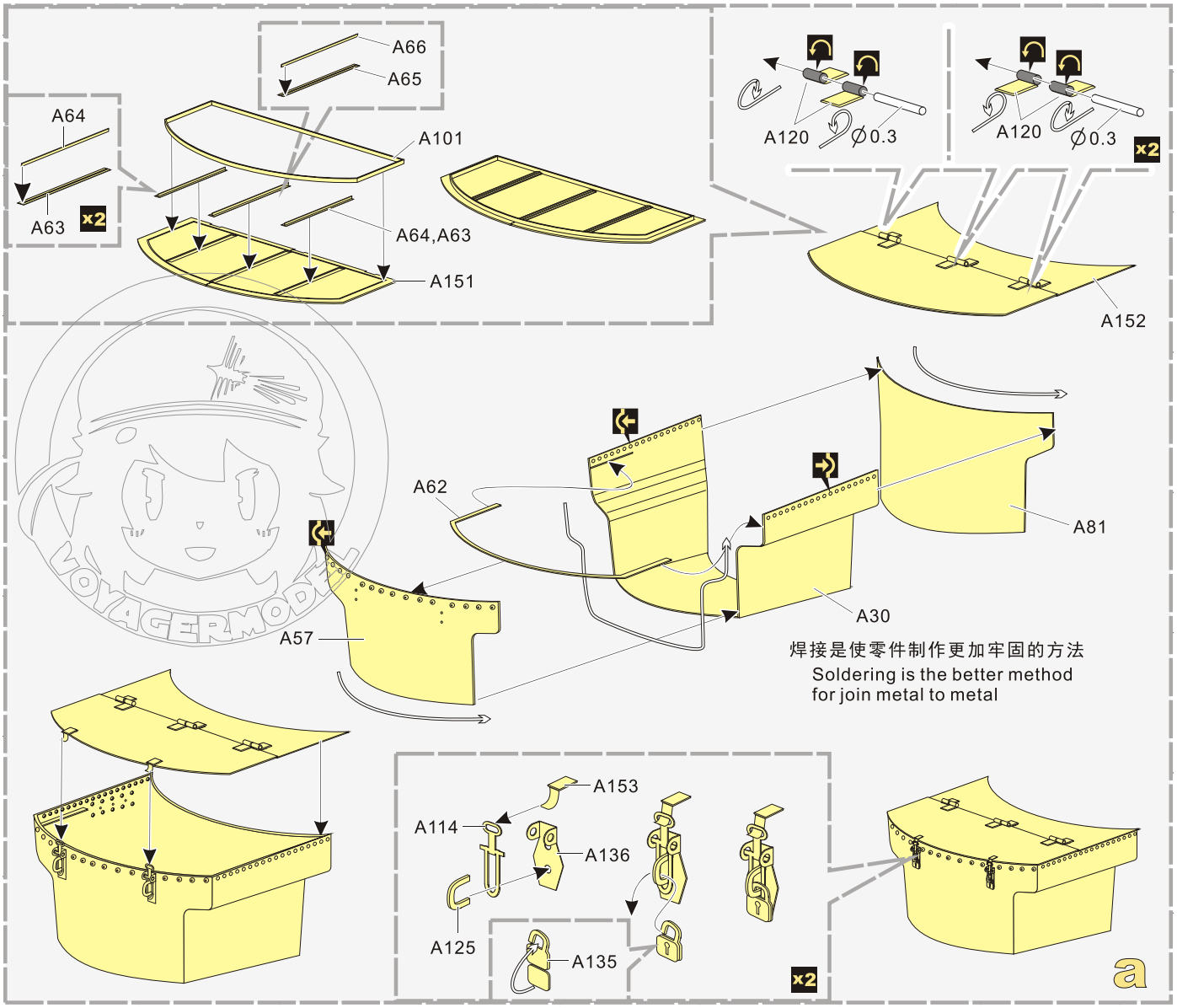



©2003-2026 SHANGHAI VOYAGERMODEL Co.,LTD

1/35 MILITARY MINIATURE VEHICLE UPGRADE SERIES PE351555

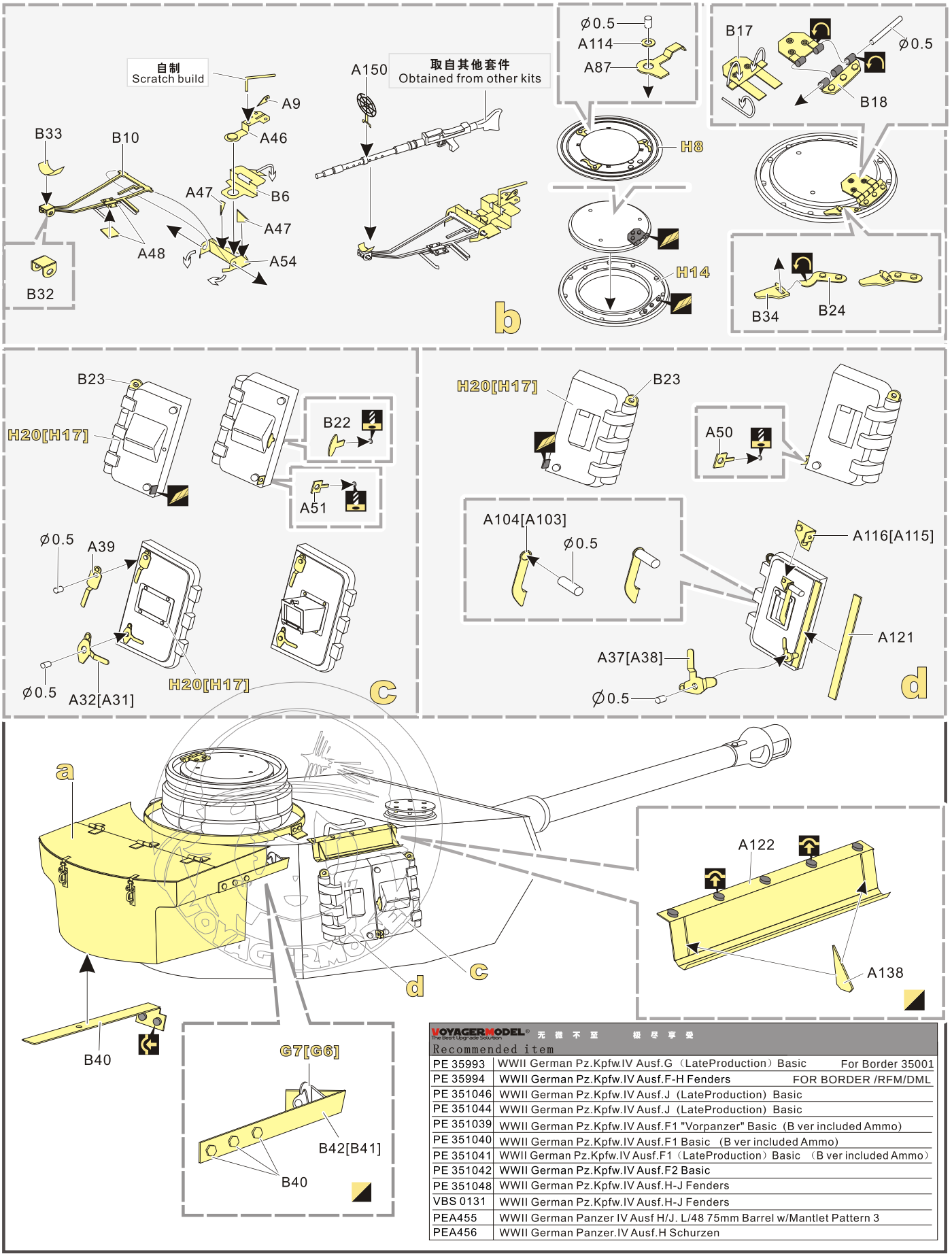


| VOYAGERMODEL® 无微不至 极尽享受 | |
|---|---|
| Recommended item | |
| PE 35993 | WWII German Pz.Kpfw.IV Ausf.G（LateProduction）Basic For Border 35001 |
| PE 35994 | WWII German Pz.Kpfw.IV Ausf.F-H Fenders FOR BORDER /RFM/DML |
| PE 351046 | WWII German Pz.Kpfw.IV Ausf.J（LateProduction）Basic |
| PE 351044 | WWII German Pz.Kpfw.IV Ausf.J（LateProduction）Basic |
| PE 351039 | WWII German Pz.Kpfw.IV Ausf.F1 "Vorpanzer" Basic（B ver included Ammo） |
| PE 351040 | WWII German Pz.Kpfw.IV Ausf.F1 Basic（B ver included Ammo） |
| PE 351041 | WWII German Pz.Kpfw.IV Ausf.F1（LateProduction）Basic（B ver included Ammo） |
| PE 351042 | WWII German Pz.Kpfw.IV Ausf.F2 Basic |
| PE 351048 | WWII German Pz.Kpfw.IV Ausf.H-J Fenders |
| VBS 0131 | WWII German Pz.Kpfw.IV Ausf.H-J Fenders |
| PEA455 | WWII German Panzer IV Ausf H/J. L/48 75mm Barrel w/Mantlet Pattern 3 |
| PEA456 | WWII German Panzer.IV Ausf.H Schurzen |


©2003-2026 SHANGHAI VOYAGERMODEL Co.,LTD

1/35 MILITARY MINIATURE VEHICLE UPGRADE SERIES PE351555

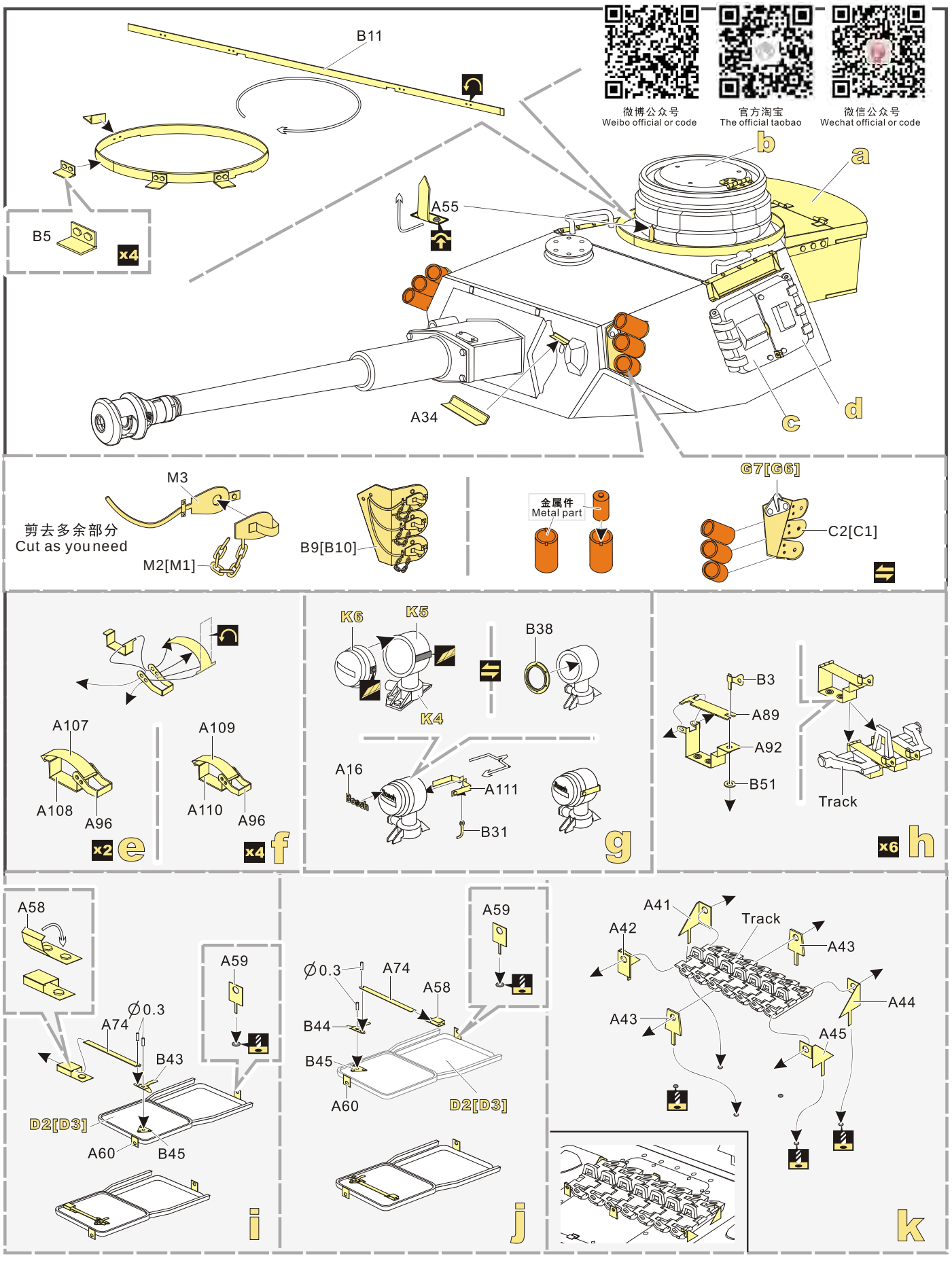



©2003-2026 SHANGHAI VOYAGERMODEL Co.,LTD

1/35 MILITARY MINIATURE VEHICLE UPGRADE SERIES PE351555

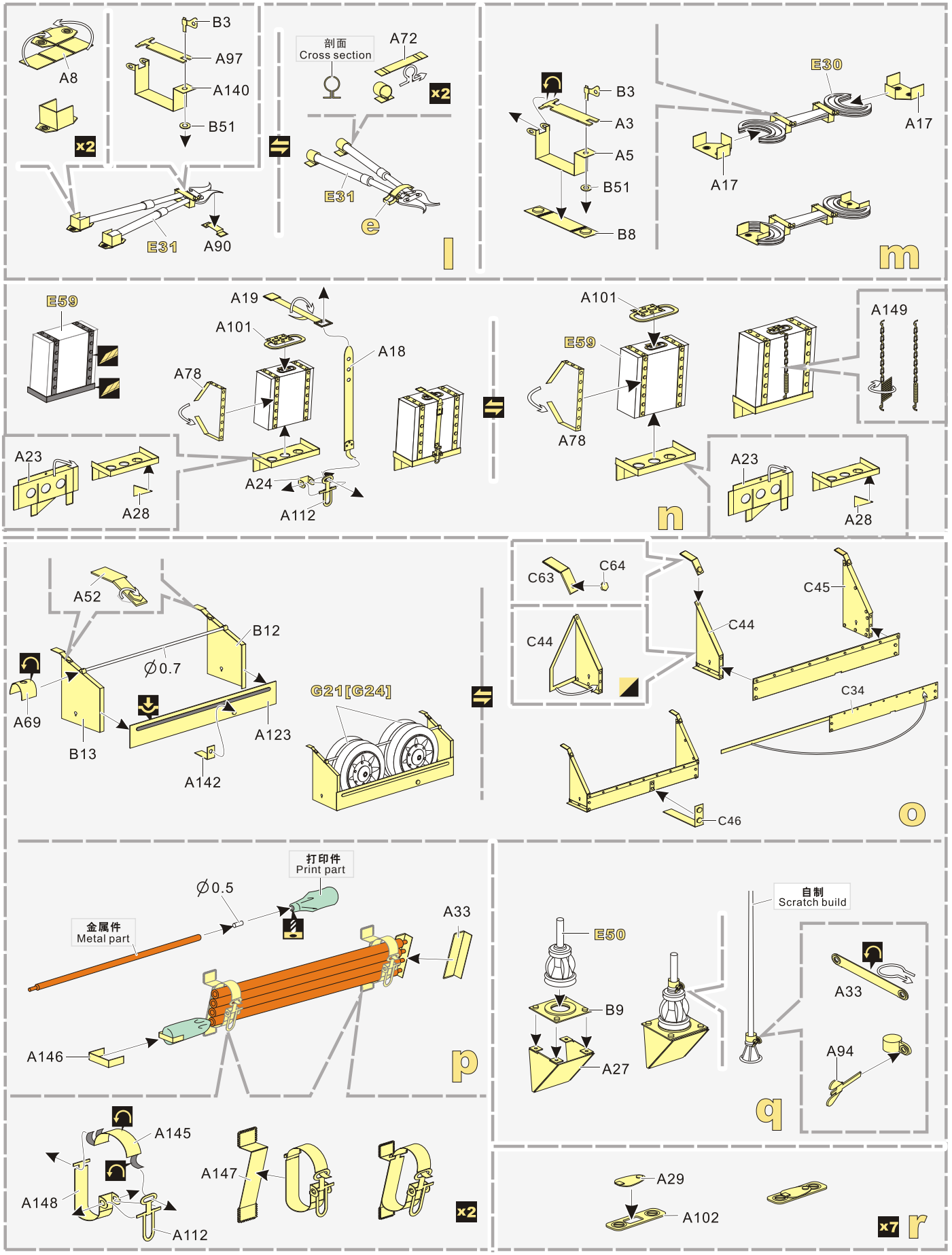



©2003-2026 SHANGHAI VOYAGERMODEL Co.,LTD

1/35 MILITARY MINIATURE VEHICLE UPGRADE SERIES PE351555

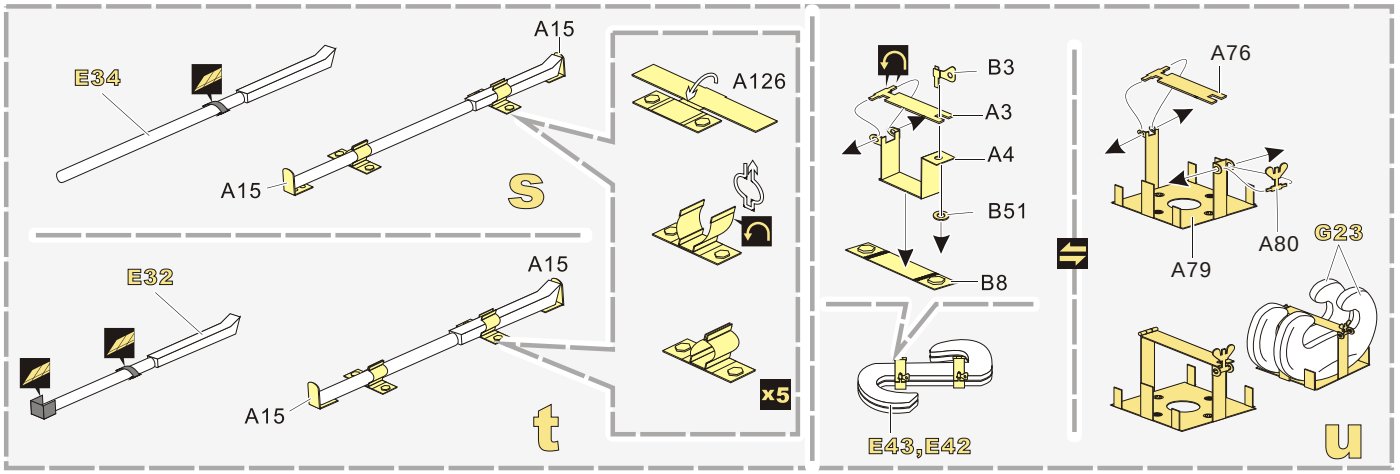


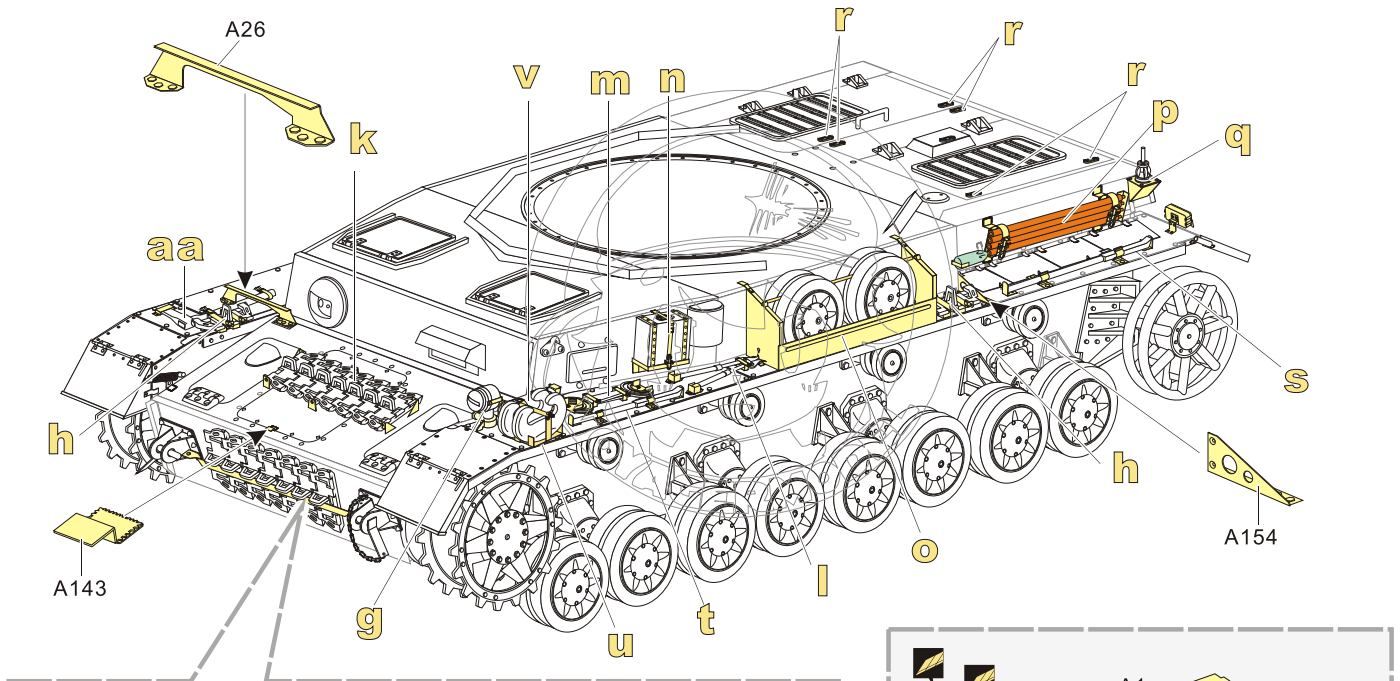


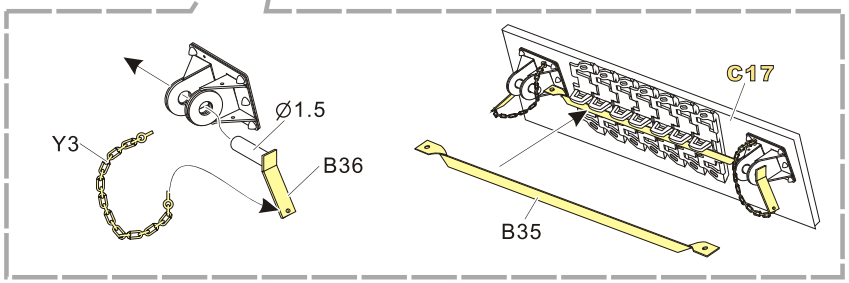


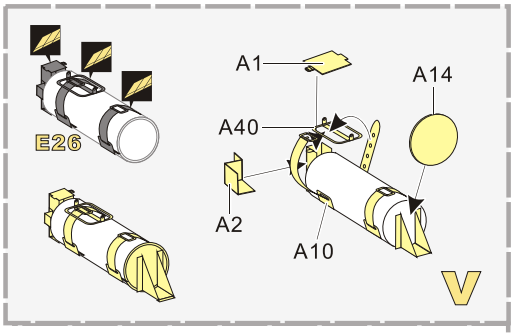


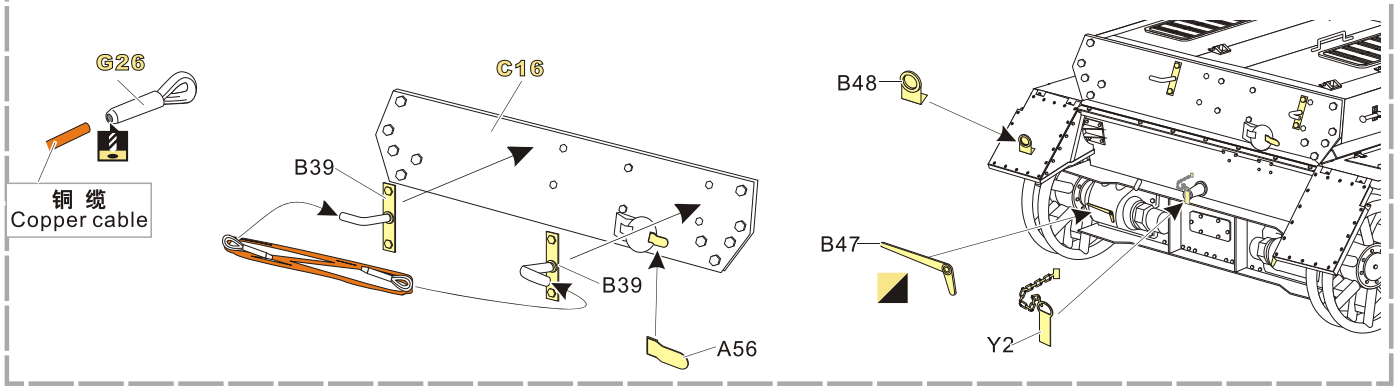



©2003-2026 SHANGHAI VOYAGERMODEL Co.,LTD

1/35 MILITARY MINIATURE VEHICLE UPGRADE SERIES PE351555

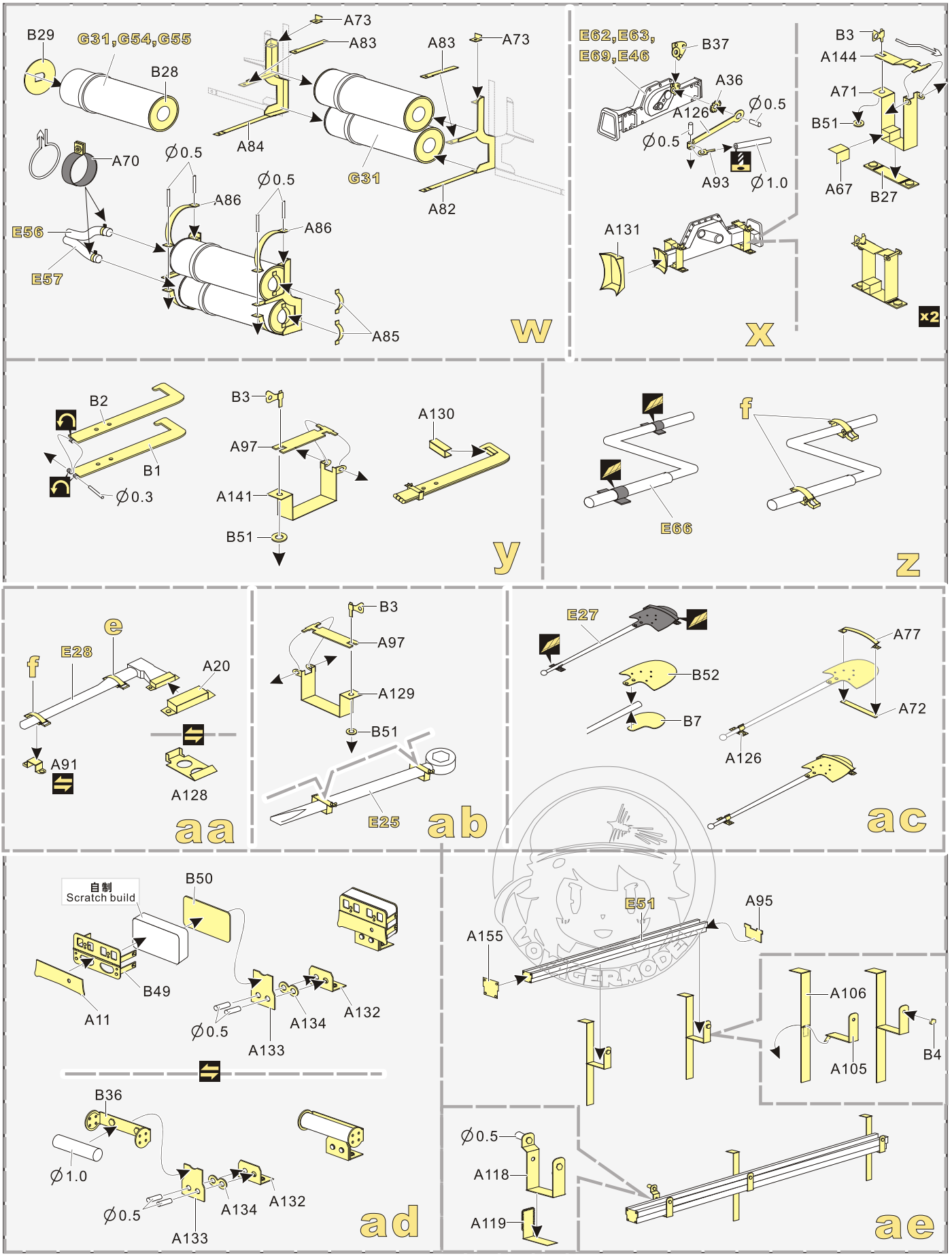



©2003-2026 SHANGHAI VOYAGERMODEL Co.,LTD

1/35 MILITARY MINIATURE VEHICLE UPGRADE SERIES PE351555

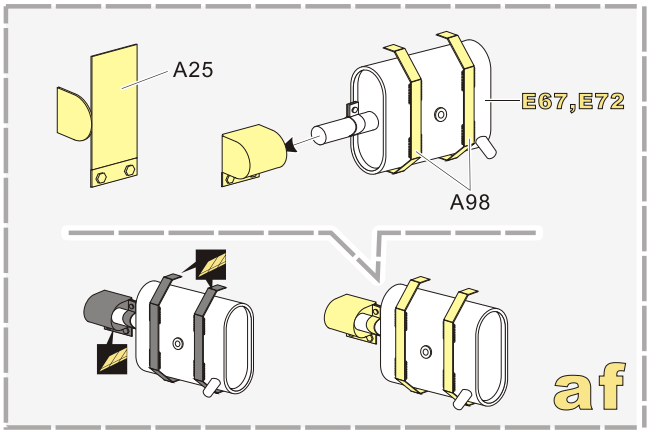


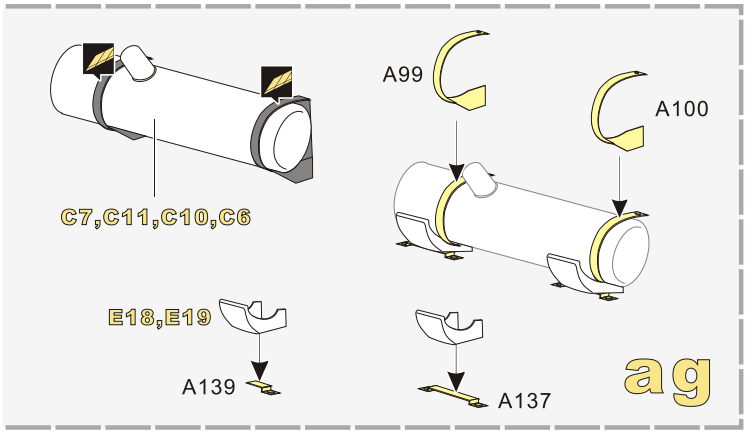


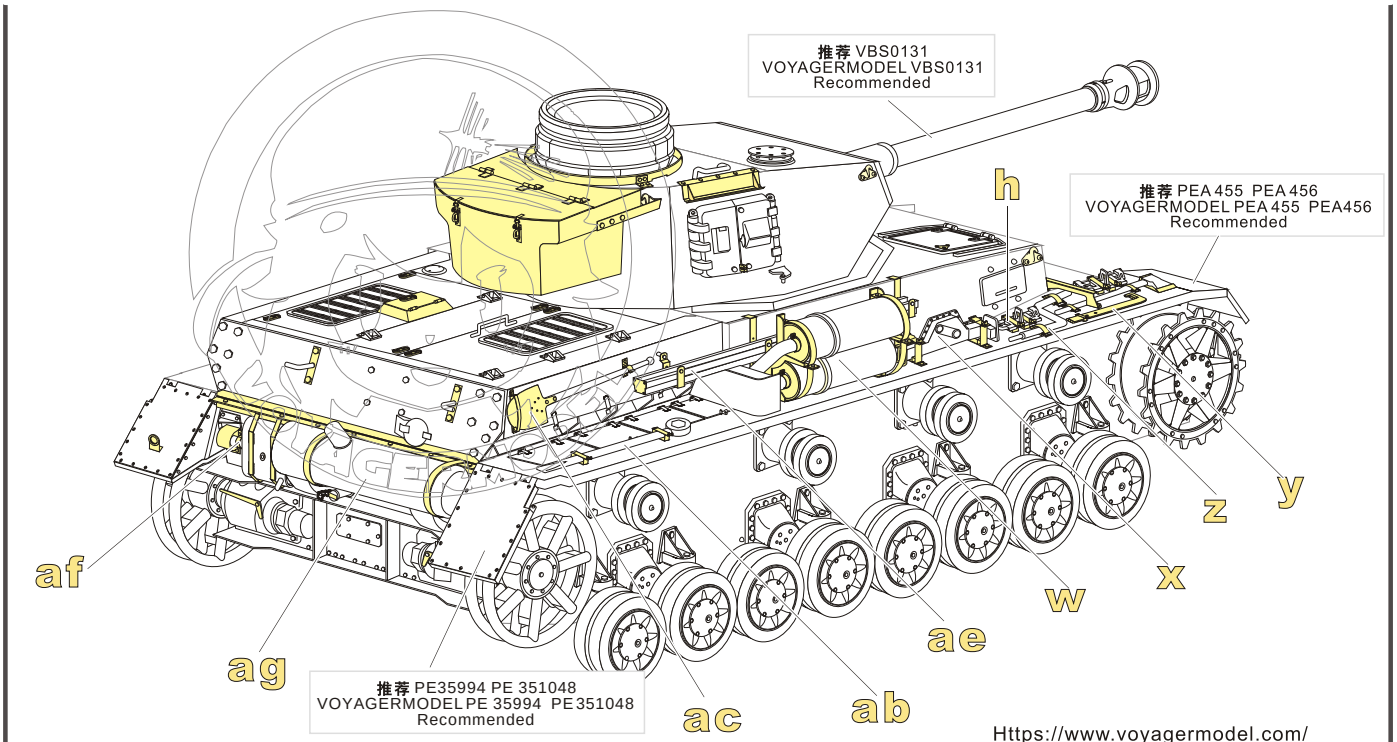


Https://www.voyagermodel.com/productdetails.asp?itemid=PE351555

VOYAGER MODEL

更多PE351555样品照片参考请扫一扫
MORE PICTUER OF PE 351555
REFERENCE SCAN HERE

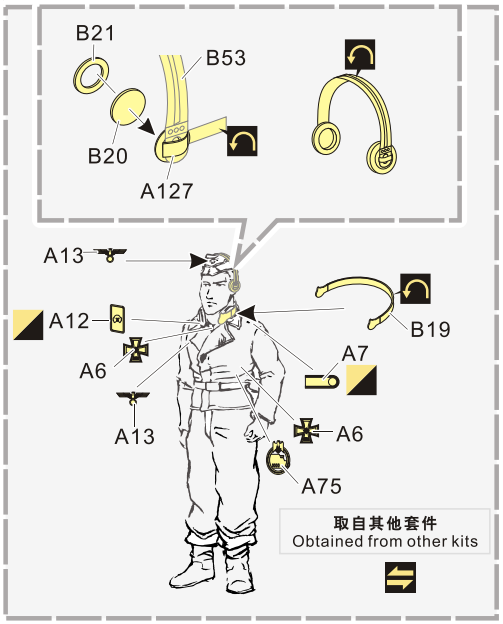


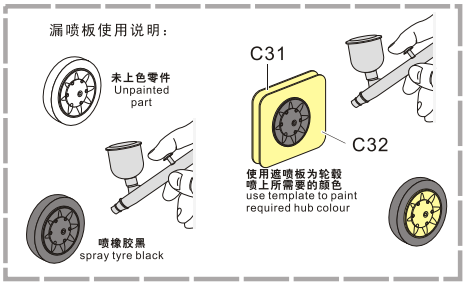


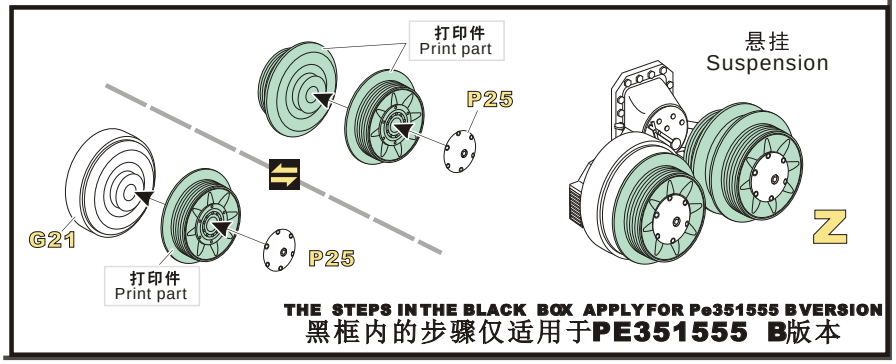



©2003-2026 SHANGHAI VOYAGERMODEL Co.,LTD