1/35 MILITARY MINIATURE VEHICLE UPGRADE SERIES PE 351565

WWII German Sd.Kfz.251/1 Ausf.D Armoured Personnel Carrier Bench & boxes

二战德军Sd.Kfz.251/1 Ausf.D装甲运兵车内部座位及杂物箱改造件

[For DRAGON Kit]

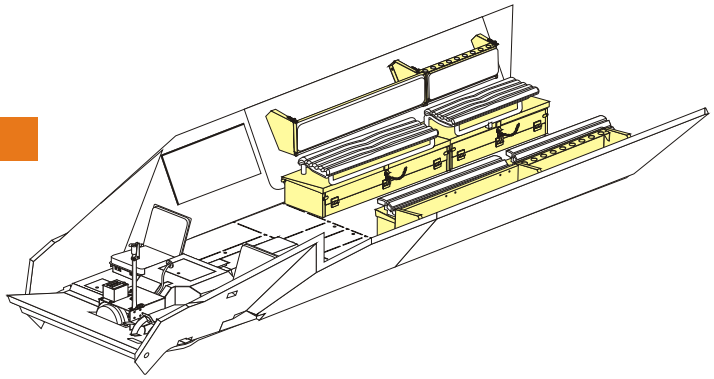

■推荐使用工具 RECOMMENDED TOOLS

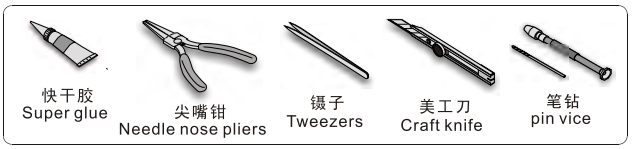

安装 install | 折叠 bend | A1 改造件零件编号 PE/resin part number | 切除 remove | 填补 fill | 弧度卷曲 radial bending

用尖端在凹槽处冲压
use penpoint to press on the dent

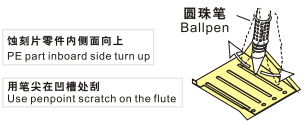

x2 制作若干组 multiple assembly | 另一侧相同制作 repeat on opposite side | 选择安装 alternative | 用胶棒制作 make from plastic rod

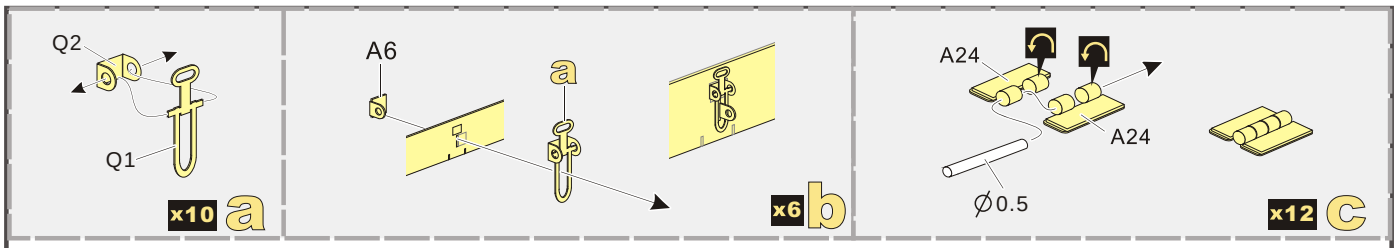

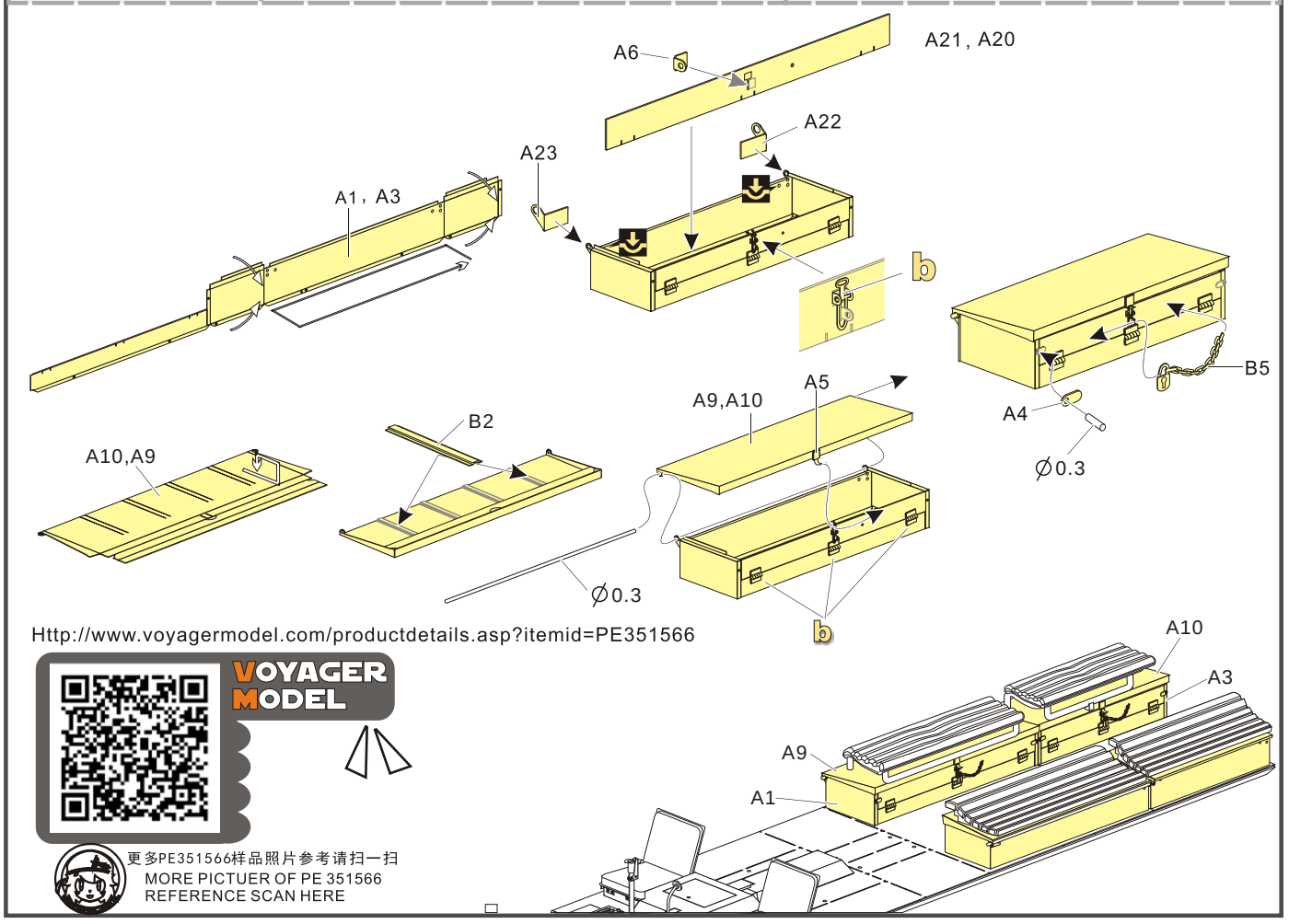

Http://www.voyagermodel.com/productdetails.asp?itemid=PE351566

VOYAGER MODEL

更多PE351566样品照片参考请扫一扫
MORE PICTUER OF PE 351566
REFERENCE SCAN HERE

©2003-2026 SHANGHAI VOYAGERMODEL Co.,LTD

1/35 MILITARY MINIATURE VEHICLE UPGRADE SERIES PE 351565

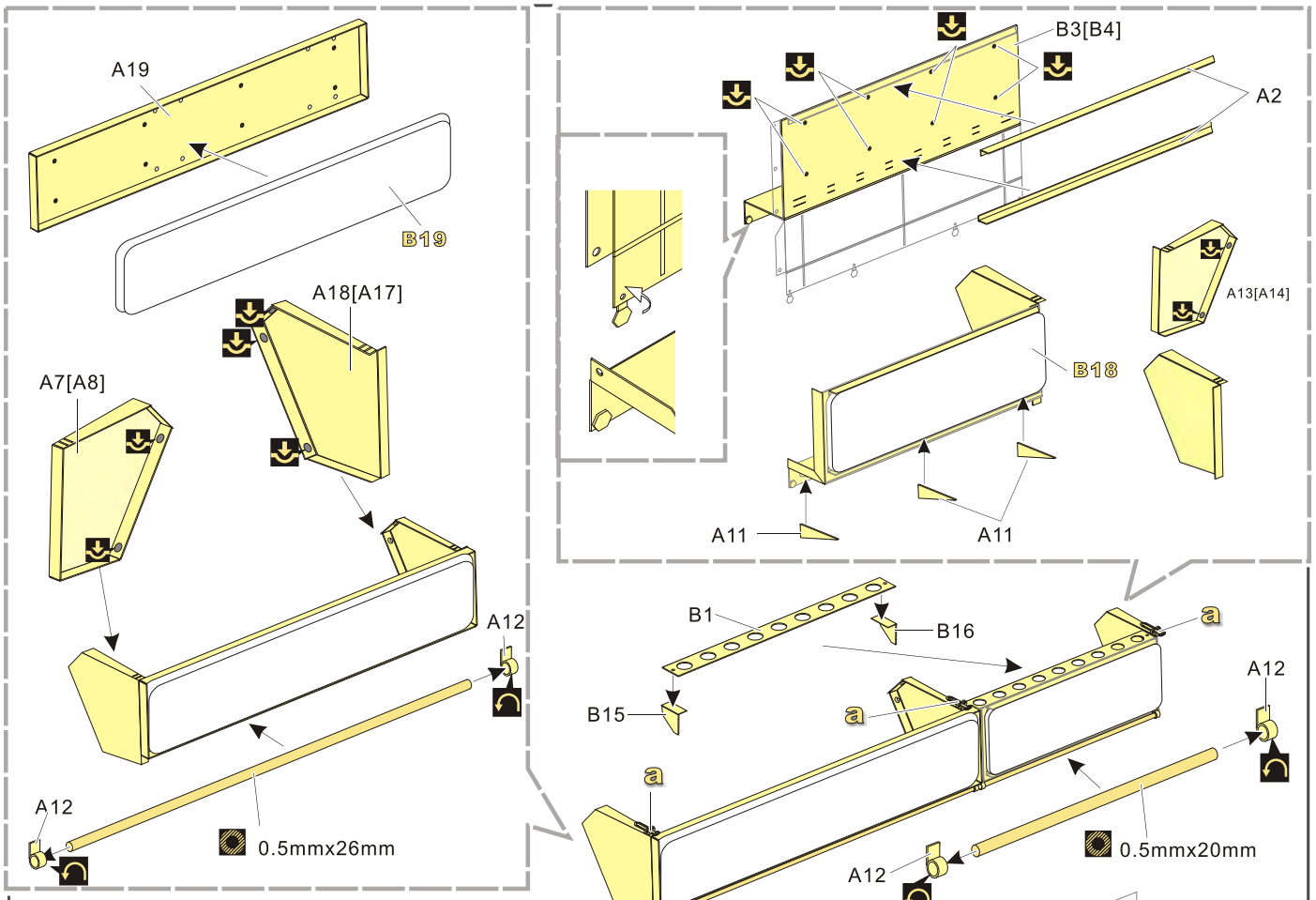

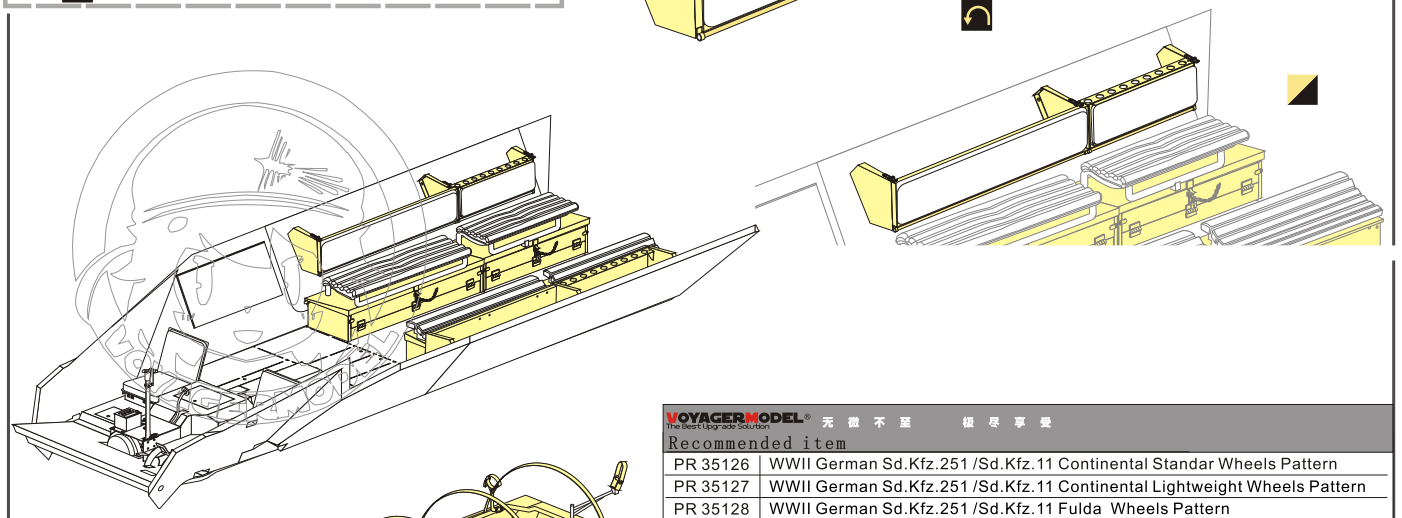

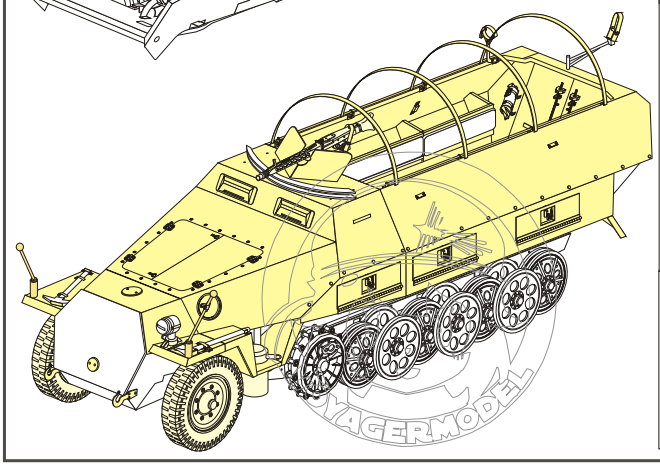

VOYAGERMODEL® The Best Upgrade Solution 无微不至 极尽享受

Recommended item

PR 35126	WWII German Sd.Kfz.251 /Sd.Kfz.11 Continental Standar Wheels Pattern
PR 35127	WWII German Sd.Kfz.251 /Sd.Kfz.11 Continental Lightweight Wheels Pattern
PR 35128	WWII German Sd.Kfz.251 /Sd.Kfz.11 Fulda Wheels Pattern
PR 35129	WWII German Sd.Kfz.251 /Sd.Kfz.11 Dunlop Wheels Pattern
PE 351564	WWII German Sd.Kfz.251 Ausf.D Floor
PE 351565	WWII German Sd.Kfz.251 Ausf.D Exterior Stowage Bins & Fenders
PE 351566	WWII German Sd.Kfz.251 Ausf.D Interior Stowage Bins
PE 351567	WWII German Sd.Kfz.251 Ausf.D Early Version Armour Plate
PE 351568	WWII German Sd.Kfz.251/1 Ausf.D Armoured Personnel Carrier w/PaK40 Basic Upgrade Set
PE 351569	WWII German Sd.Kfz.251/1 Ausf.D Armoured Personnel Carrier Basic Upgrade Set 2.0
PE 351570	WWII German Sd.Kfz.251/1 Ausf.D Armoured Personnel Carrier mit 28/32cm Wurfrahmen 40 Basic Upgrade Set
PE 351571	WWII German Sd.Kfz.251/2 Ausf.D w/Mortar Gun Basic Upgrade Set
PE 351572	WWII German Sd.Kfz.251/7 Ausf.D Pionerpanzerwagon mit sPzB 41 Anti-Gun Basic Upgrade Set
PE 351573	WWII German Sd.Kfz.251/9 Ausf.D mit 7.5cm Kanone 37 Basic Upgrade Set
PE 351574	WWII German Sd.Kfz.251/9 Ausf.D mit 7.5cm KwK37 L/24 Basic Upgrade Set
PE 351575	WWII German Sd.Kfz.251/1 Ausf.D Armoured Personnel Carrier Night Fighting Version Basic Upgrade Set
PE 351576	WWII German Sd.Kfz.251/16 Ausf.D Flamepanzerwagon Basic Upgrade Set
PE 351577	WWII German Sd.Kfz.251/17 Ausf.D Basic Upgrade Set
PE 351578	WWII German Sd.Kfz.251/21 Ausf.D Drilling Basic Upgrade Set

©2003-2026 SHANGHAI VOYAGERMODEL Co.,LTD