1/35 MILITARY MINIATURE VEHICLE UPGRADE SERIES PE351591

WWII German Panther F Basic

二战德军黑豹坦克F型基本改造件

[For TAKOM 35003]

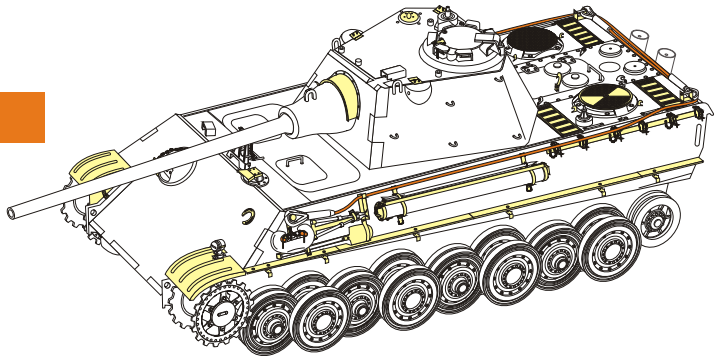

■推荐使用工具 RECOMMENDED TOOLS

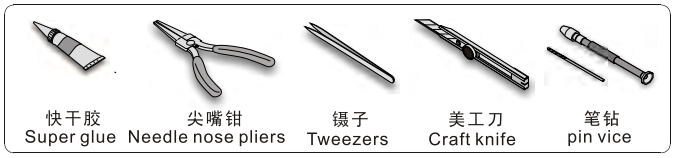

安装 install　折叠 bend　A1 改造件零件编号 PE/resin part number　B12 原零件编号 kit part number　C22 被替换的原零件编号 replaced kit part number　钻孔 drill

切除 remove　打磨 grind off　弧度卷曲 radial bending　制作若干组 multiple assembly　选择安装 alternative　另一侧相同制作 repeat on opposite side

用尖端在凹槽处冲压
use penpoint to press on the dent

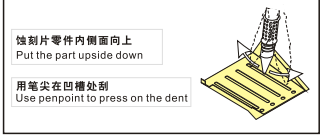

制作线圈
make coil

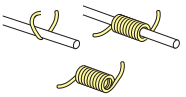

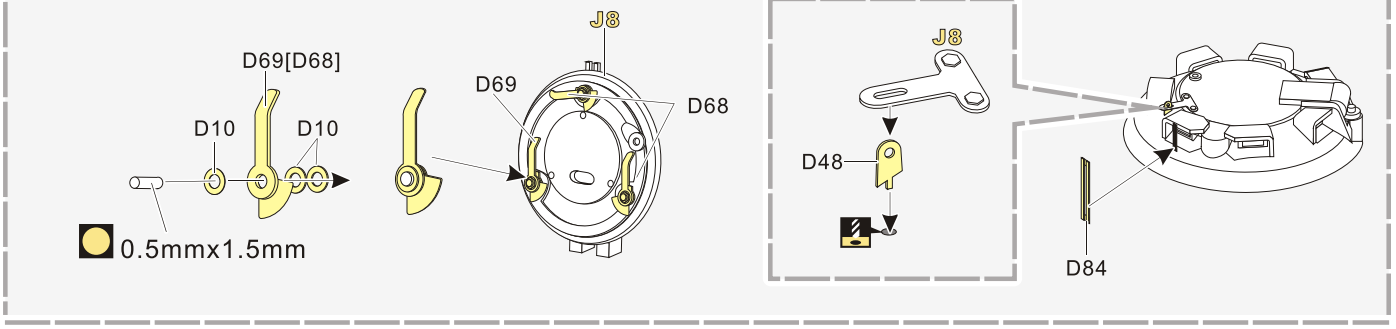

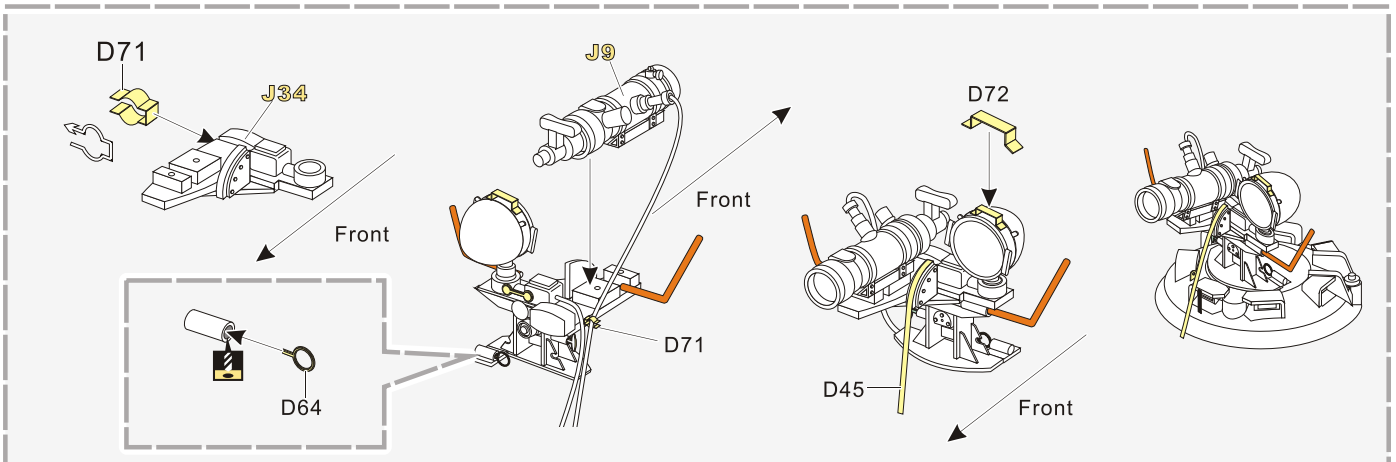

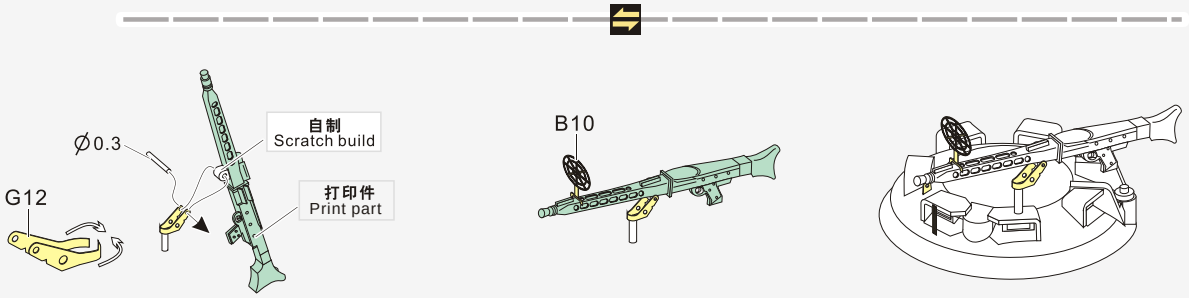

a

©2003-2026 SHANGHAI VOYAGERMODEL Co.,LTD

1/35 MILITARY MINIATURE VEHICLE UPGRADE SERIES PE351591

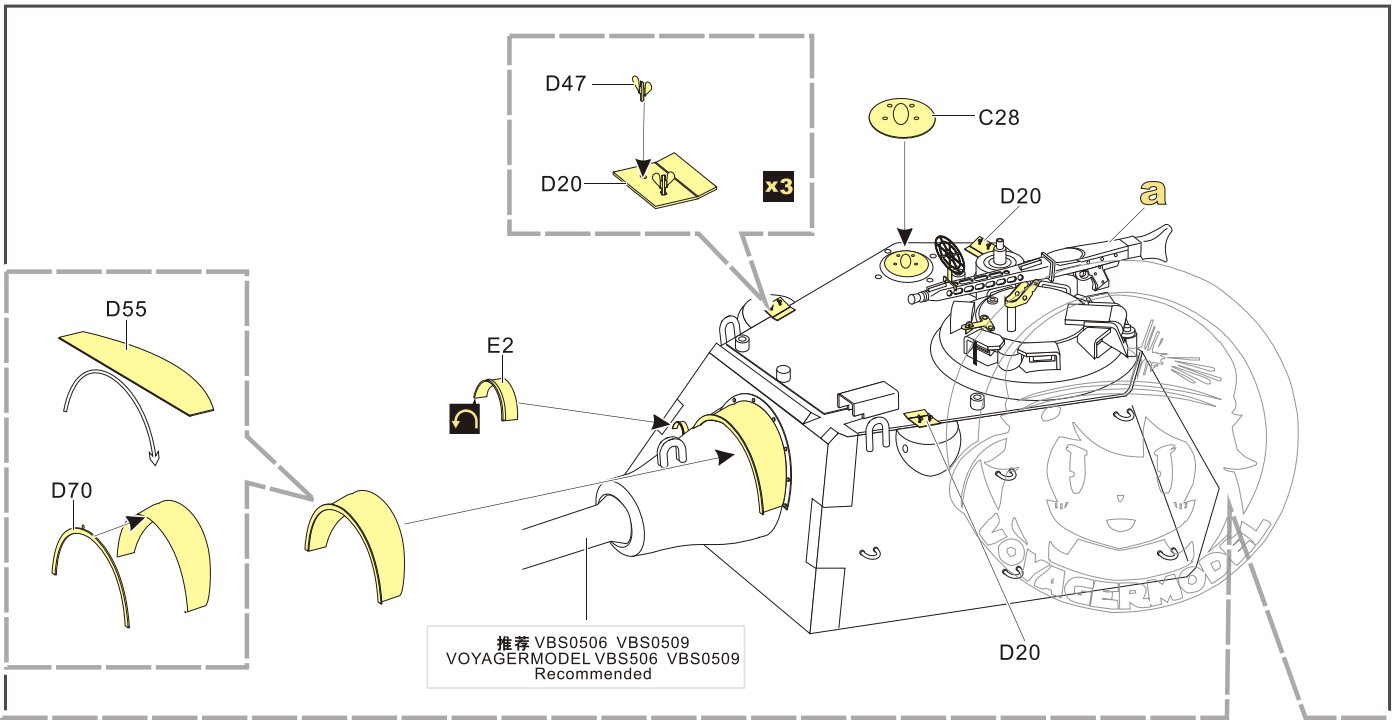

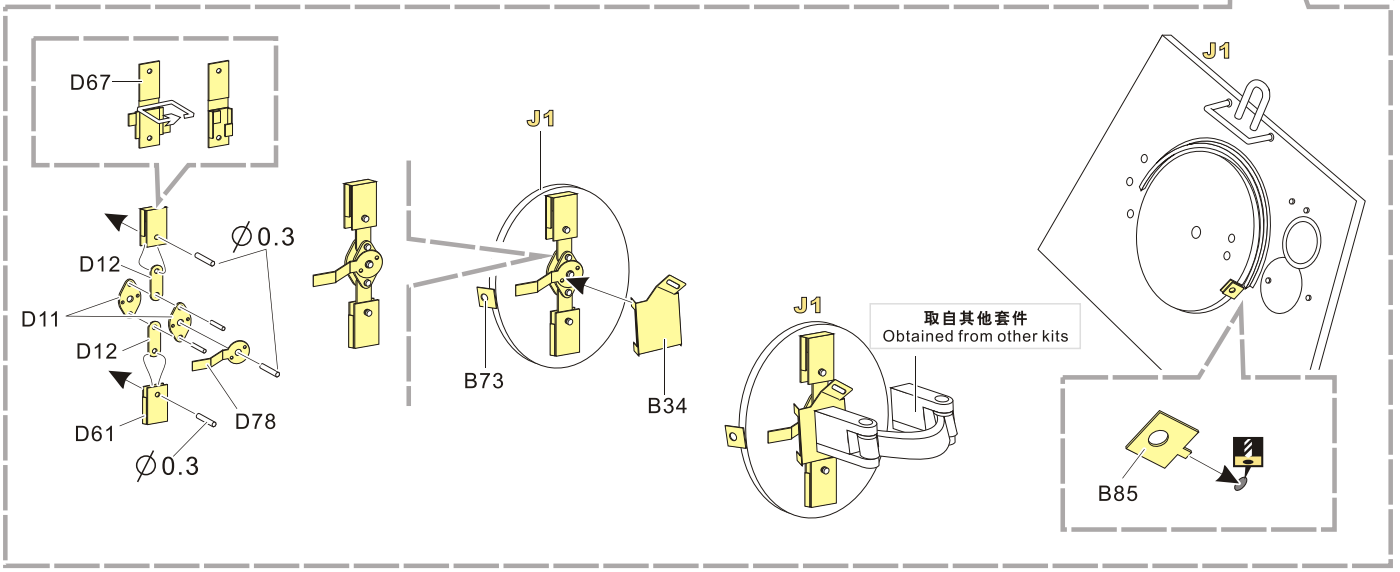

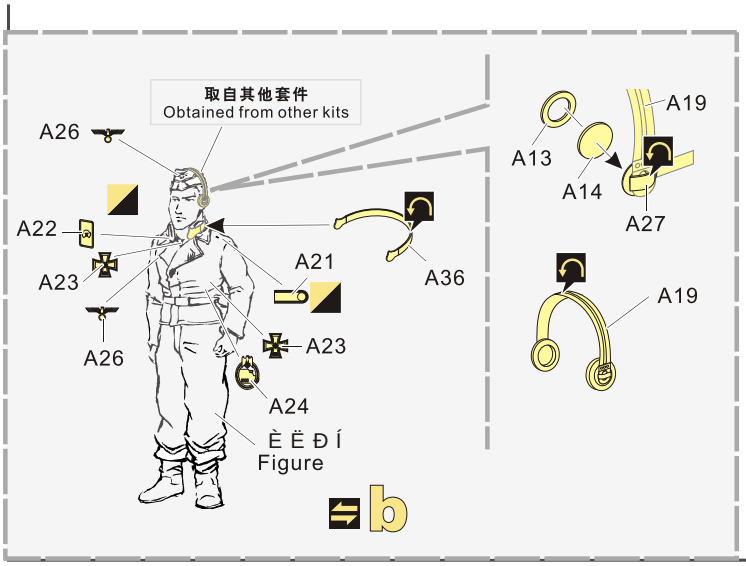

Https://www.voyagermodel.com/productdetails.asp?itemid=PE351591

VOYAGER MODEL

更多PE351591样品照片参考请扫一扫
MORE PICTUER OF PE 351591
REFERENCE SCAN HERE

©2003-2026 SHANGHAI VOYAGERMODEL Co.,LTD

1/35 MILITARY MINIATURE VEHICLE UPGRADE SERIES PE351591

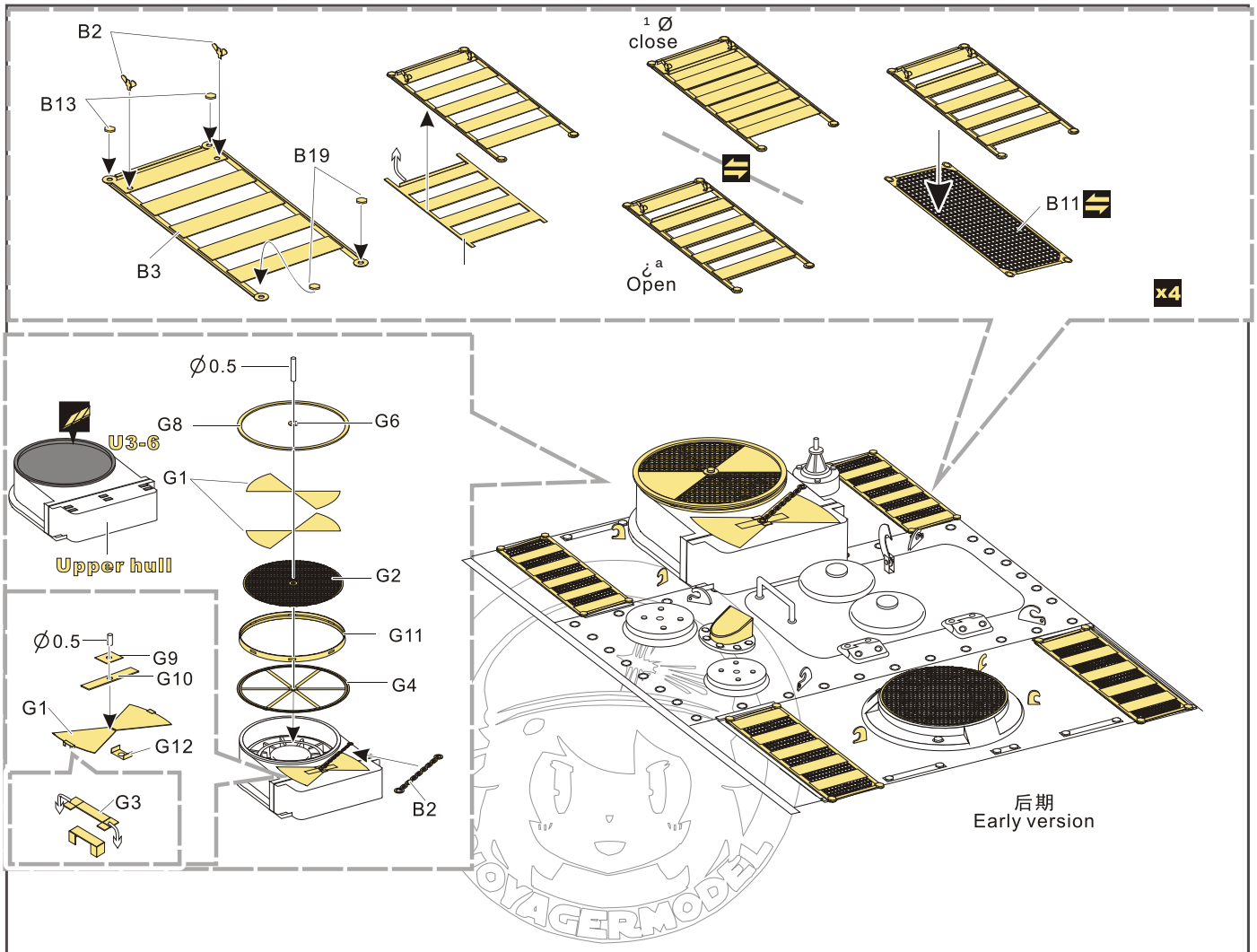

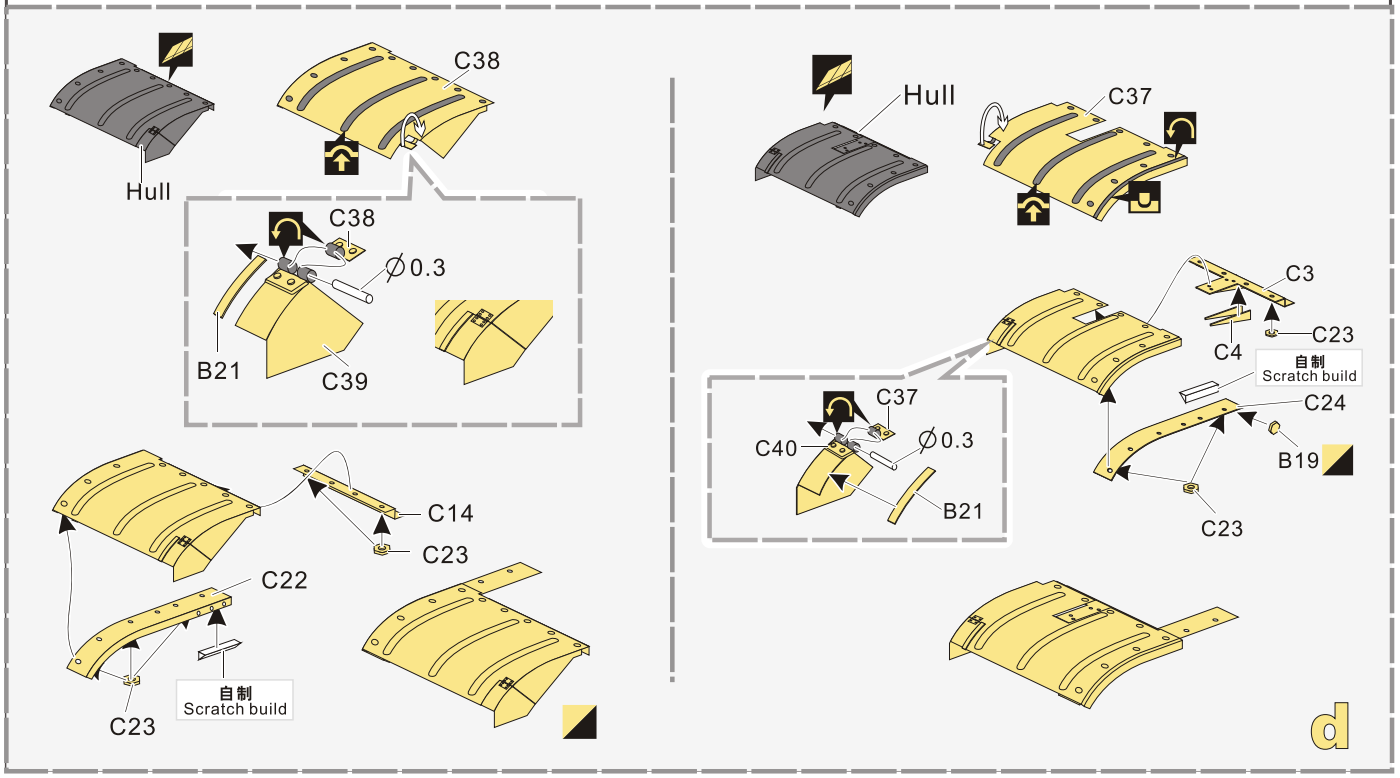

©2003-2026 SHANGHAI VOYAGERMODEL Co.,LTD

1/35 MILITARY MINIATURE VEHICLE UPGRADE SERIES PE351591

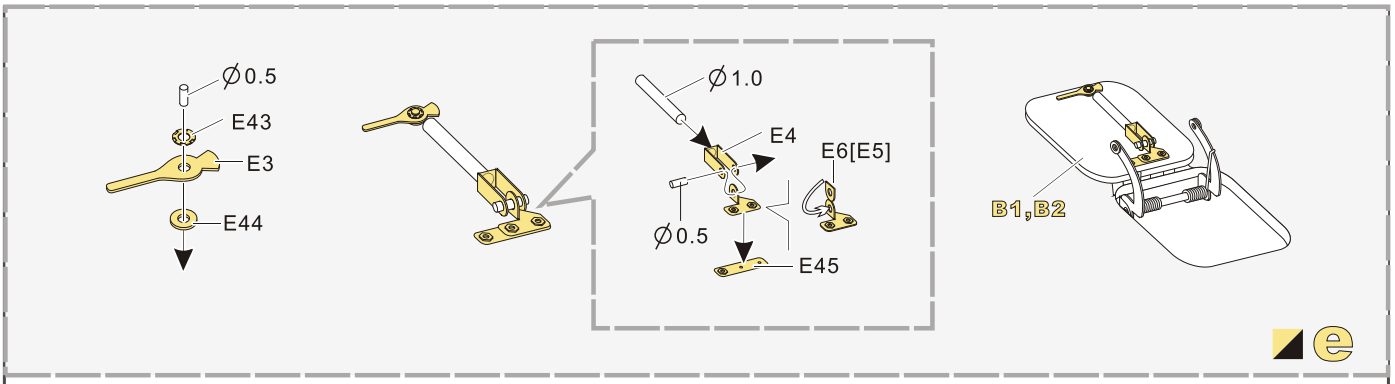

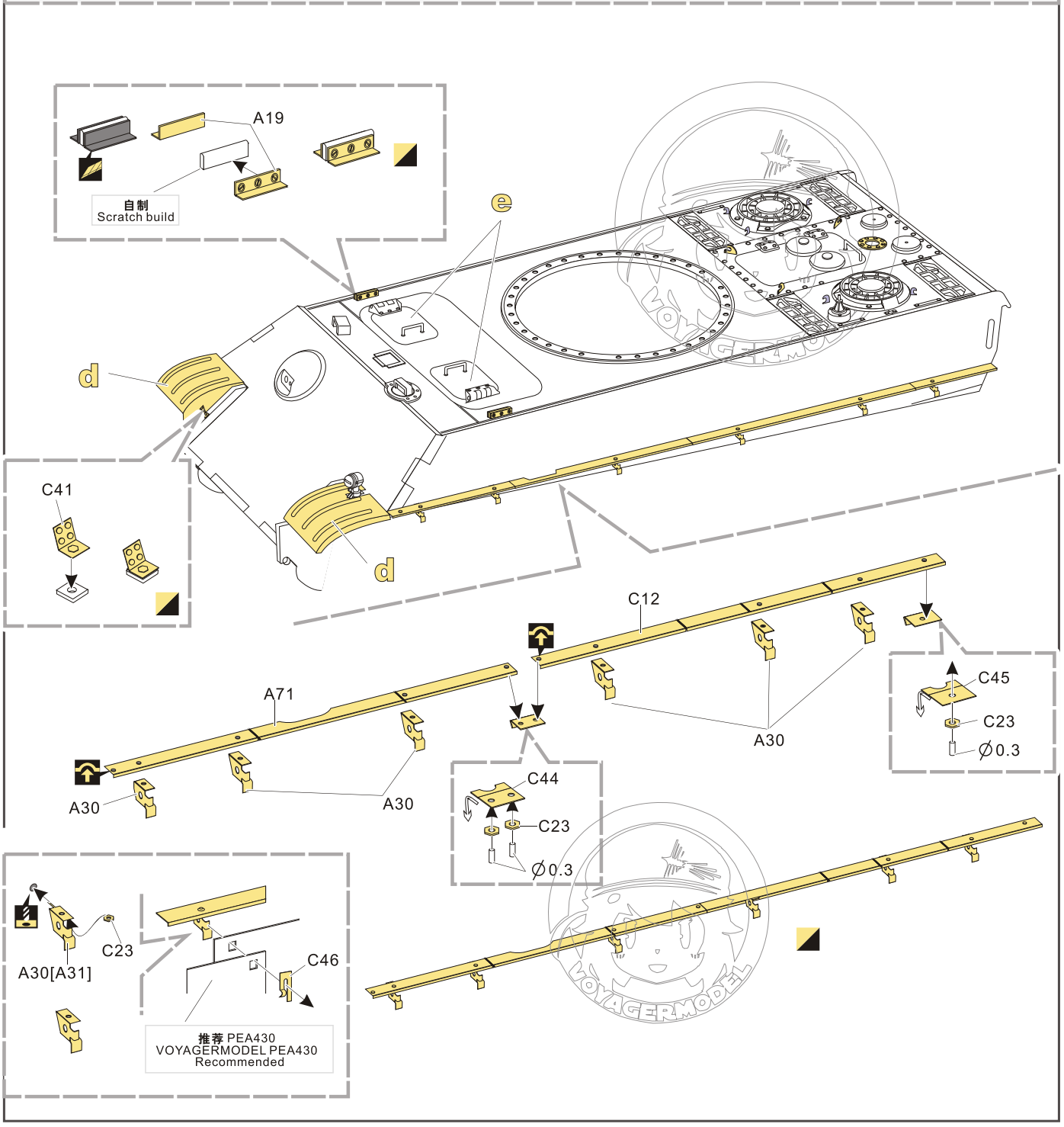

©2003-2026 SHANGHAI VOYAGERMODEL Co.,LTD

1/35 MILITARY MINIATURE VEHICLE UPGRADE SERIES PE351591

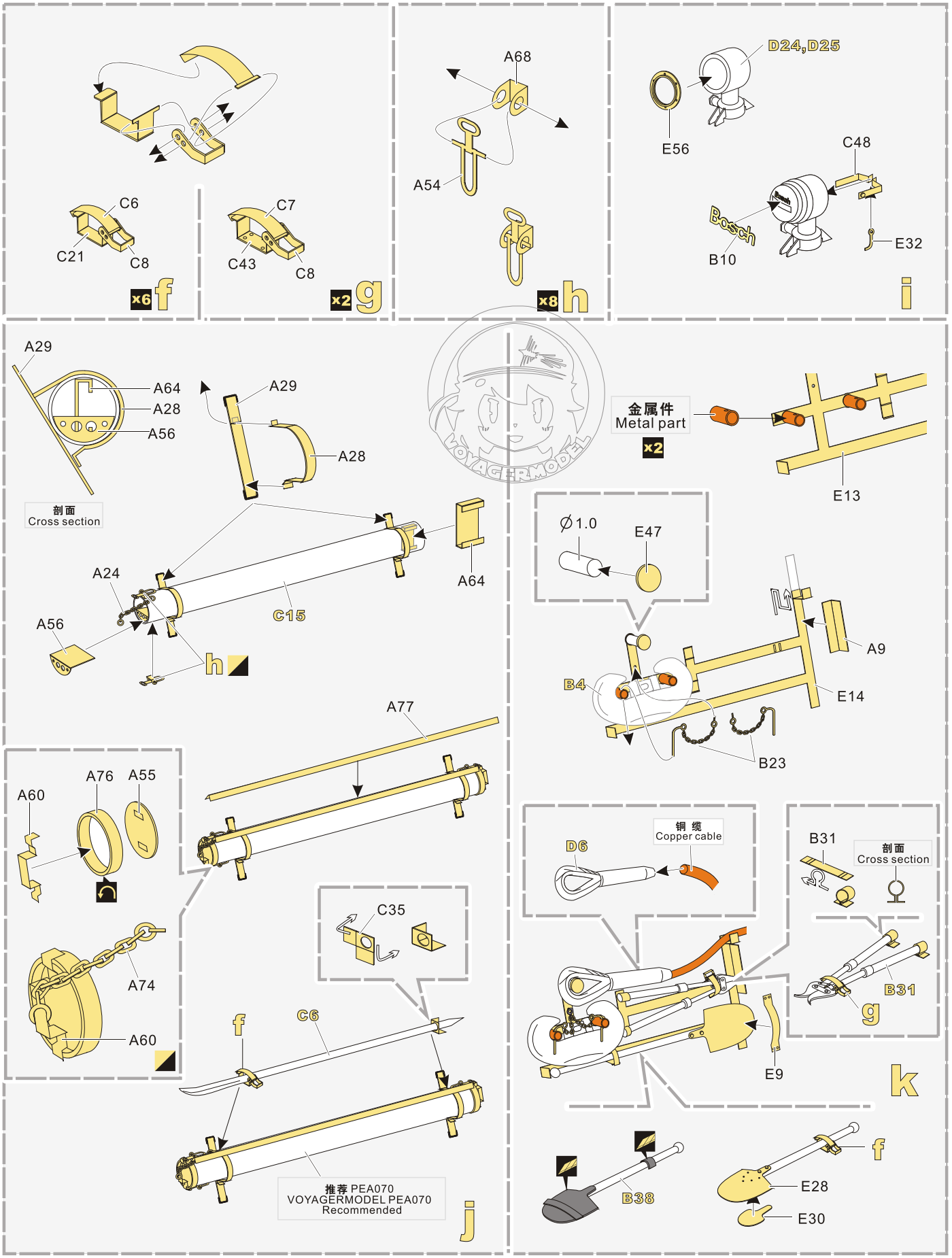

©2003-2026 SHANGHAI VOYAGERMODEL Co.,LTD

1/35 MILITARY MINIATURE VEHICLE UPGRADE SERIES PE351591

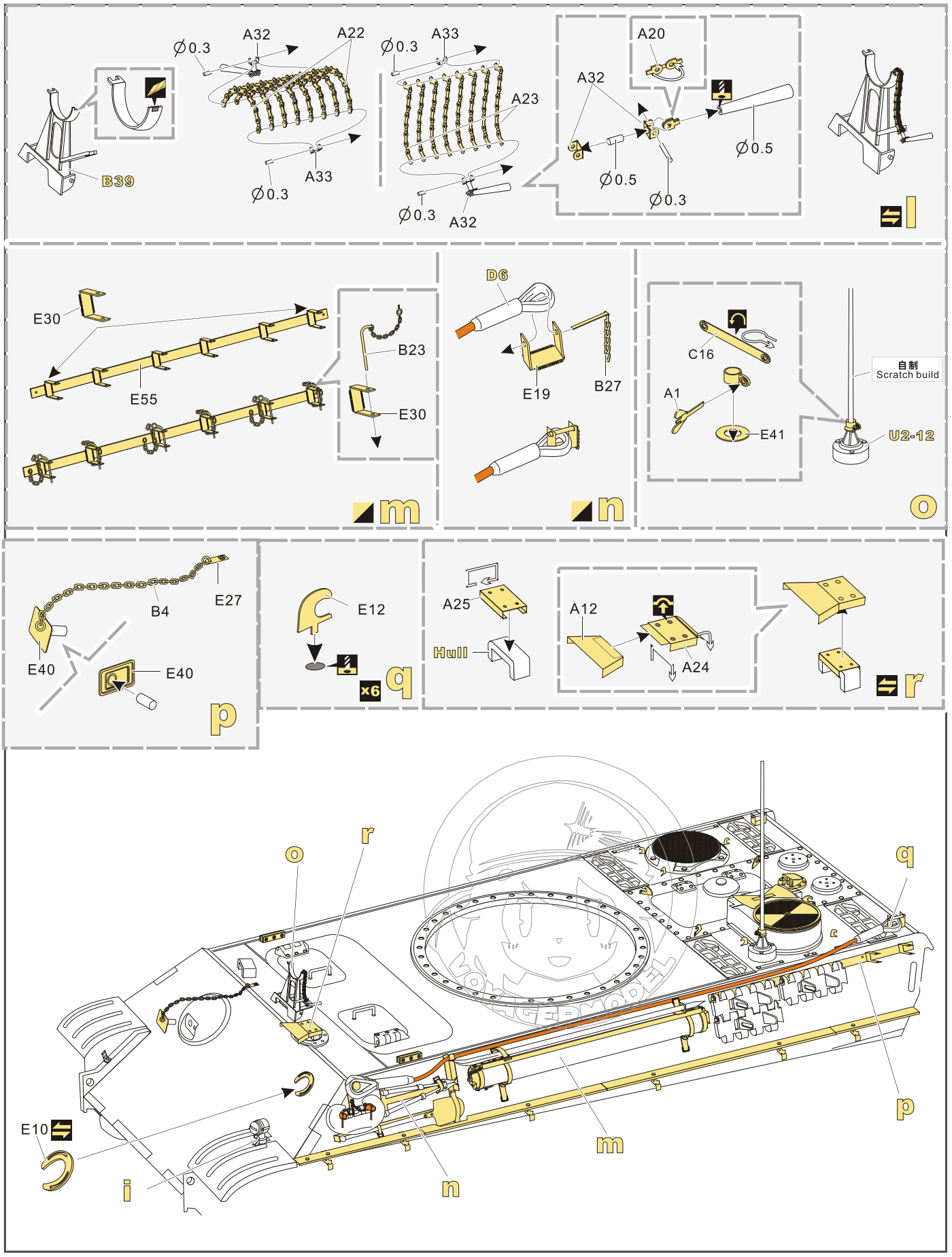

©2003-2026 SHANGHAI VOYAGERMODEL Co.,LTD

1/35 MILITARY MINIATURE VEHICLE UPGRADE SERIES PE351591

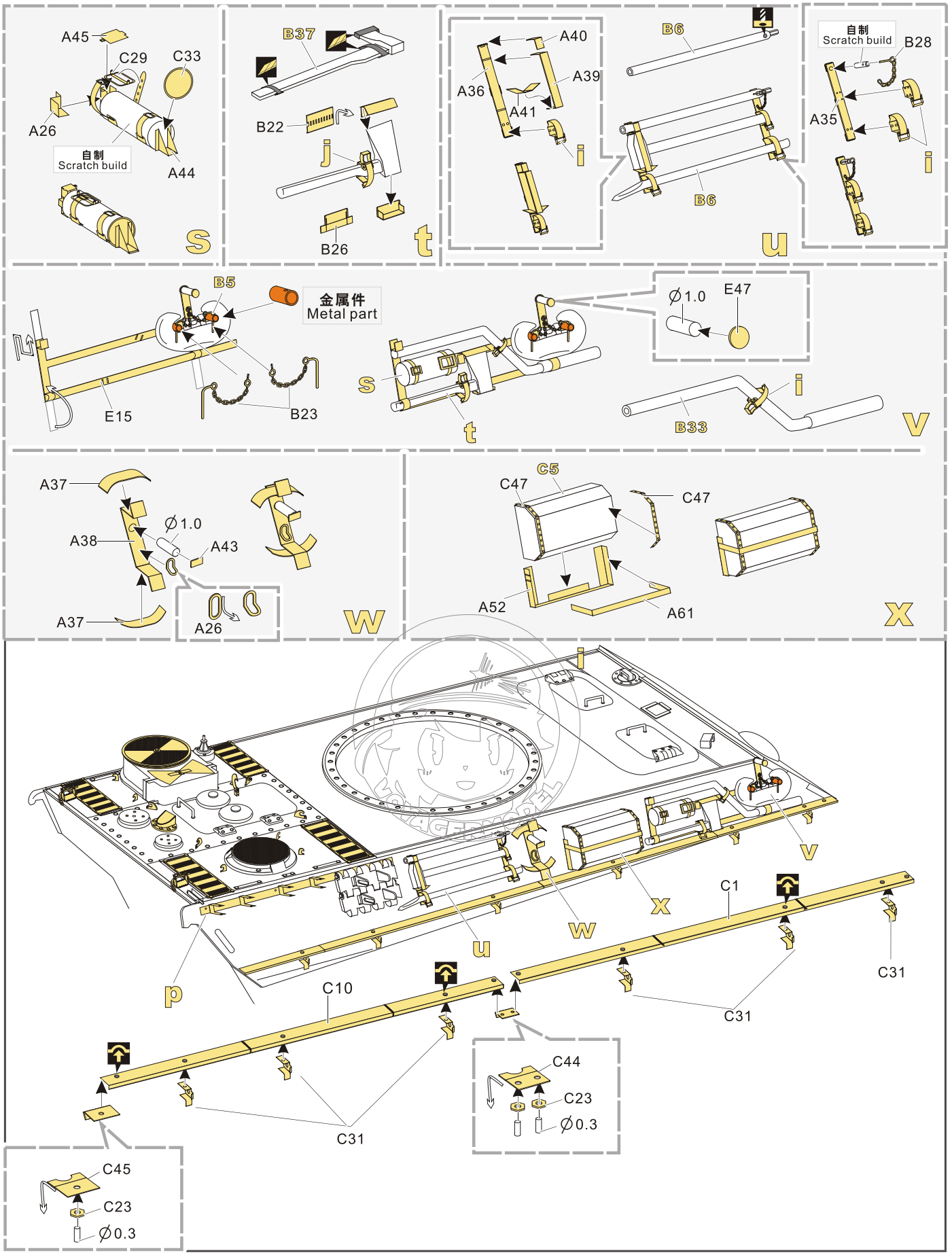

©2003-2026 SHANGHAI VOYAGERMODEL Co.,LTD

1/35 MILITARY MINIATURE VEHICLE UPGRADE SERIES PE351591

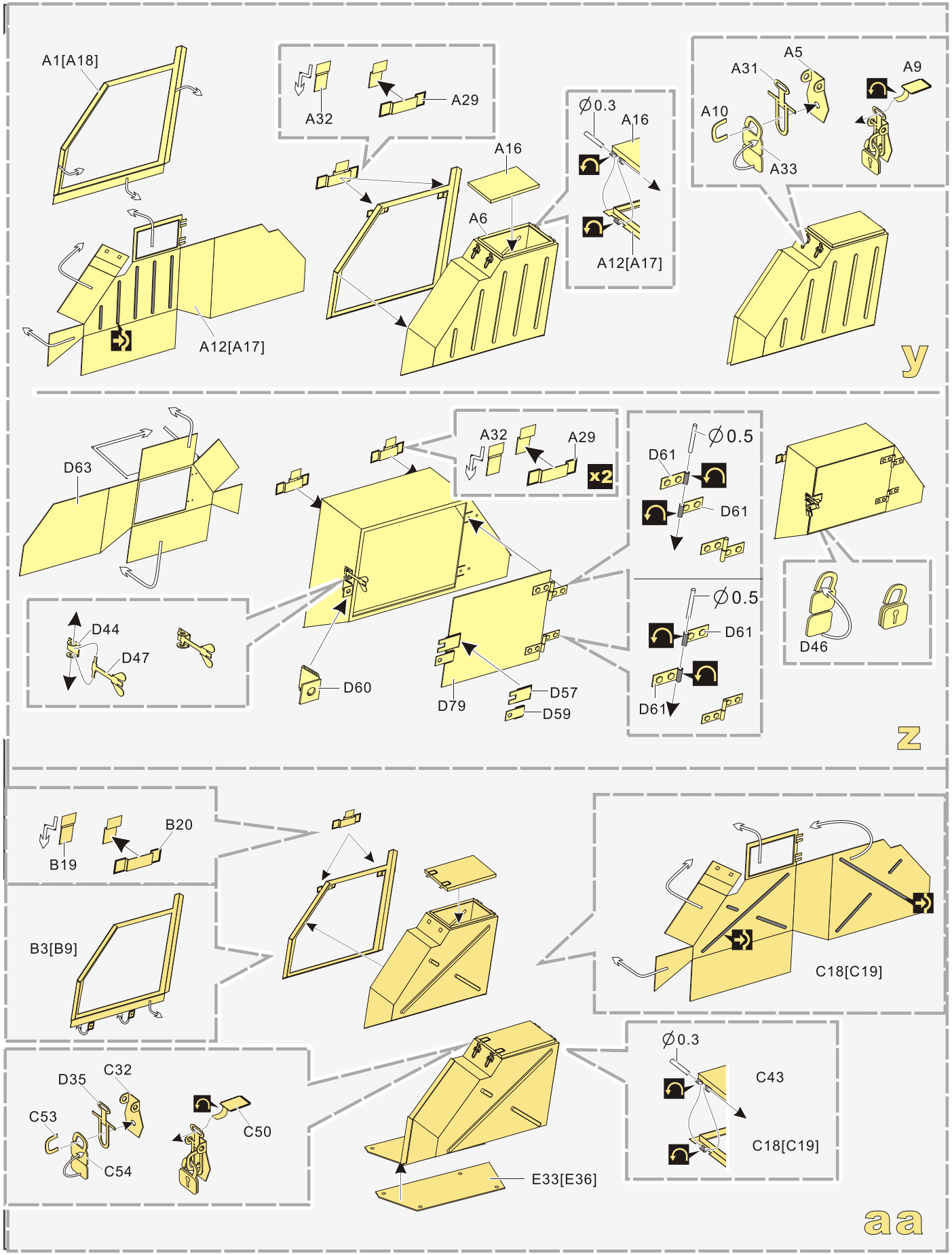

©2003-2026 SHANGHAI VOYAGERMODEL Co.,LTD

1/35 MILITARY MINIATURE VEHICLE UPGRADE SERIES PE351591

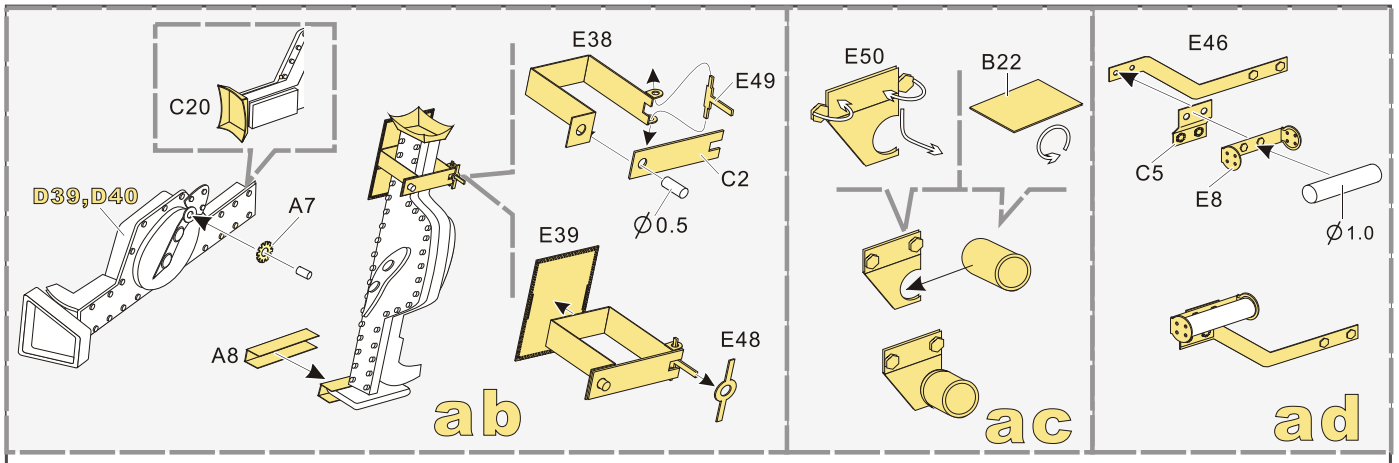

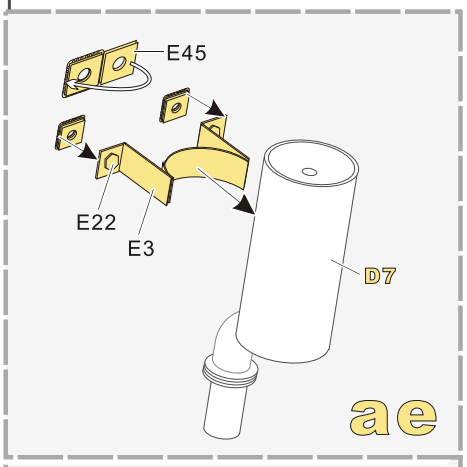

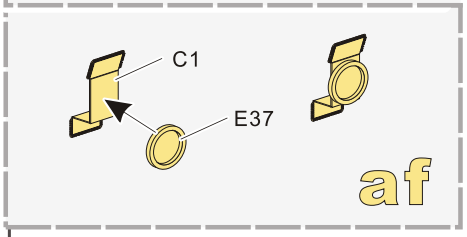

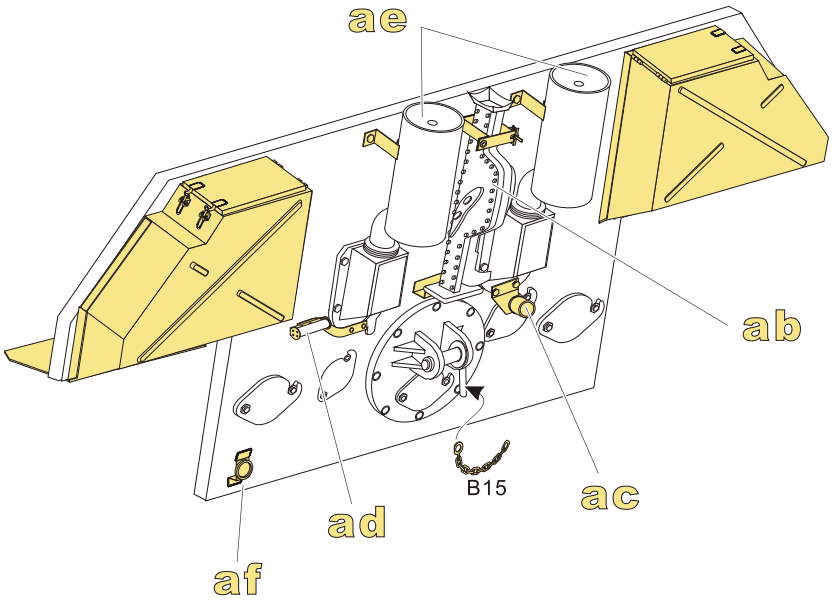

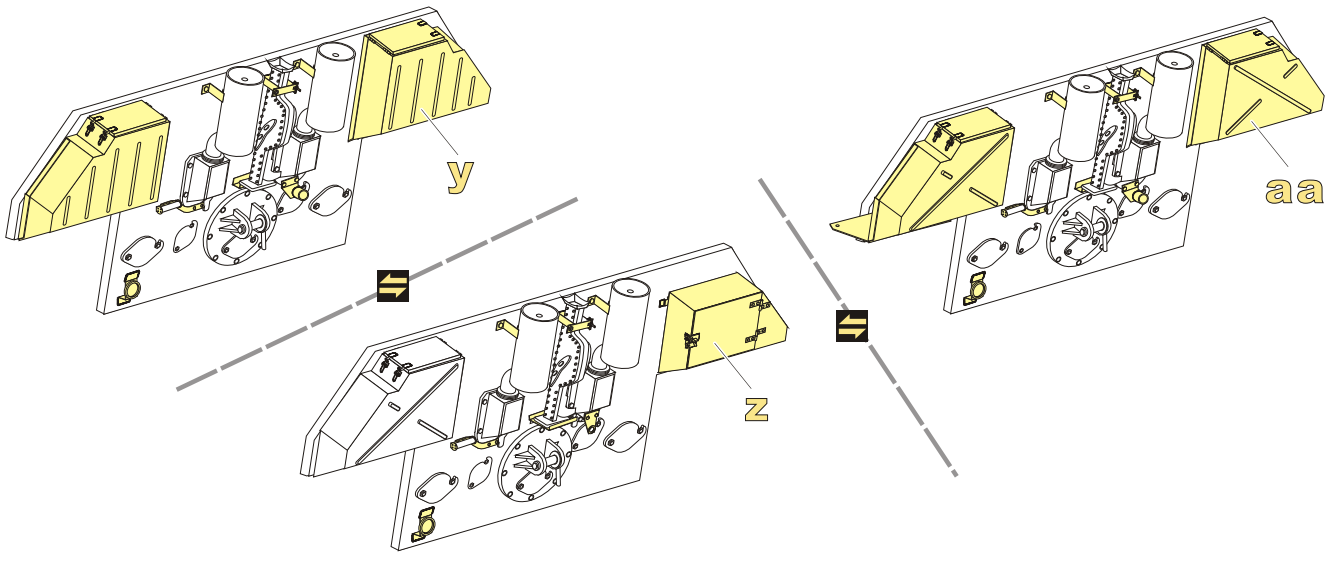

©2003-2026 SHANGHAI VOYAGERMODEL Co.,LTD

1/35 MILITARY MINIATURE VEHICLE UPGRADE SERIES PE351591

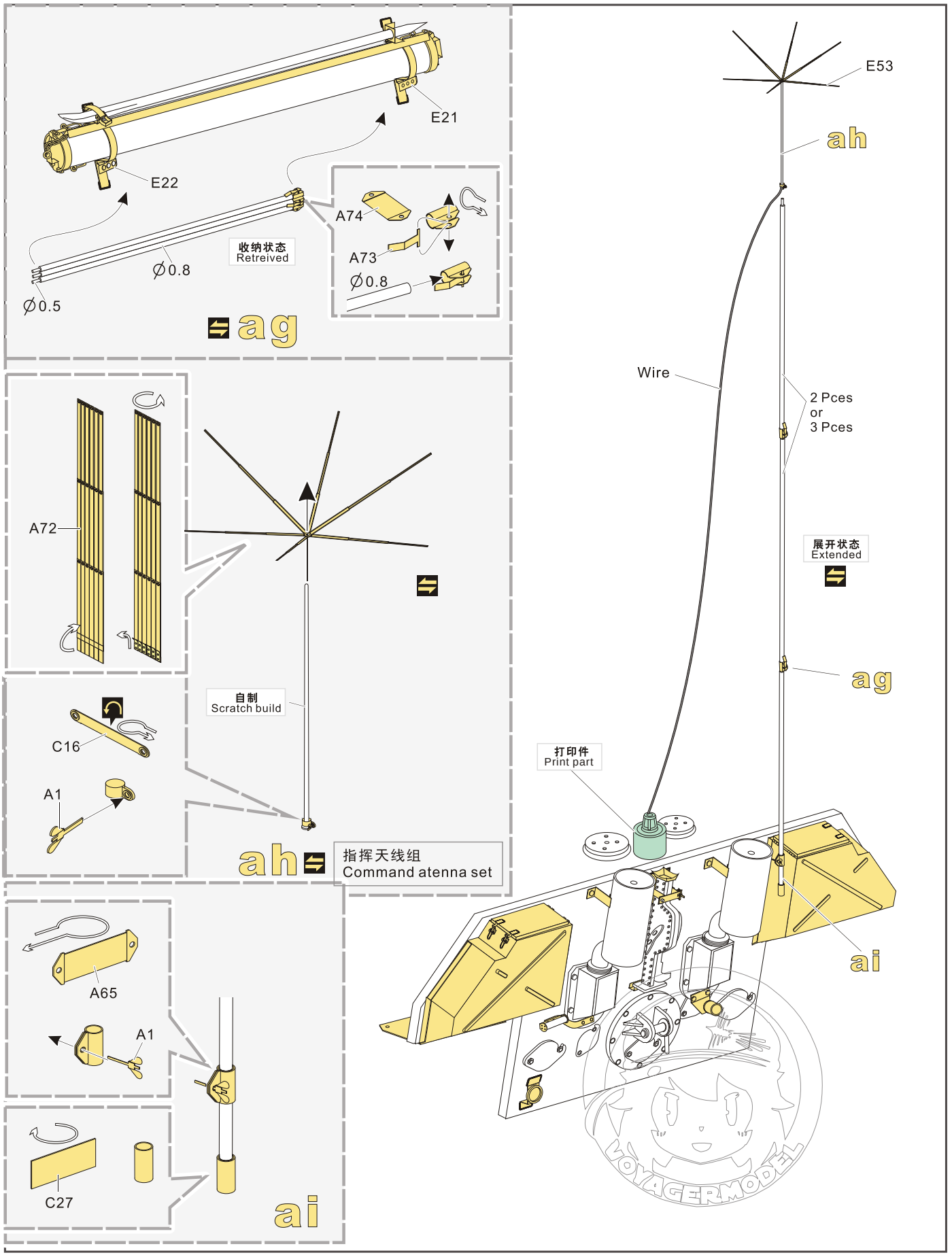

©2003-2026 SHANGHAI VOYAGERMODEL Co.,LTD

1/35 MILITARY MINIATURE VEHICLE UPGRADE SERIES PE351591

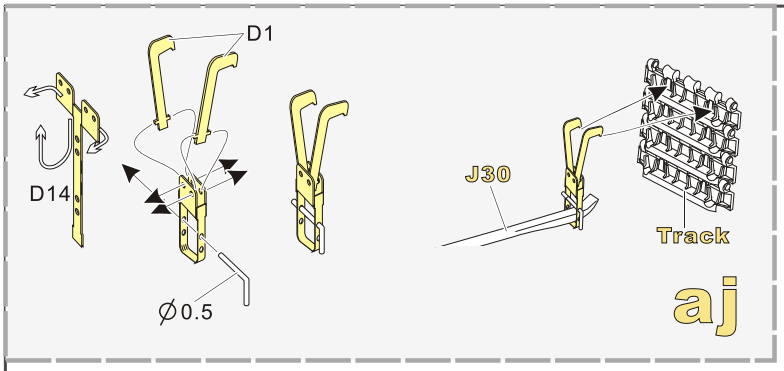

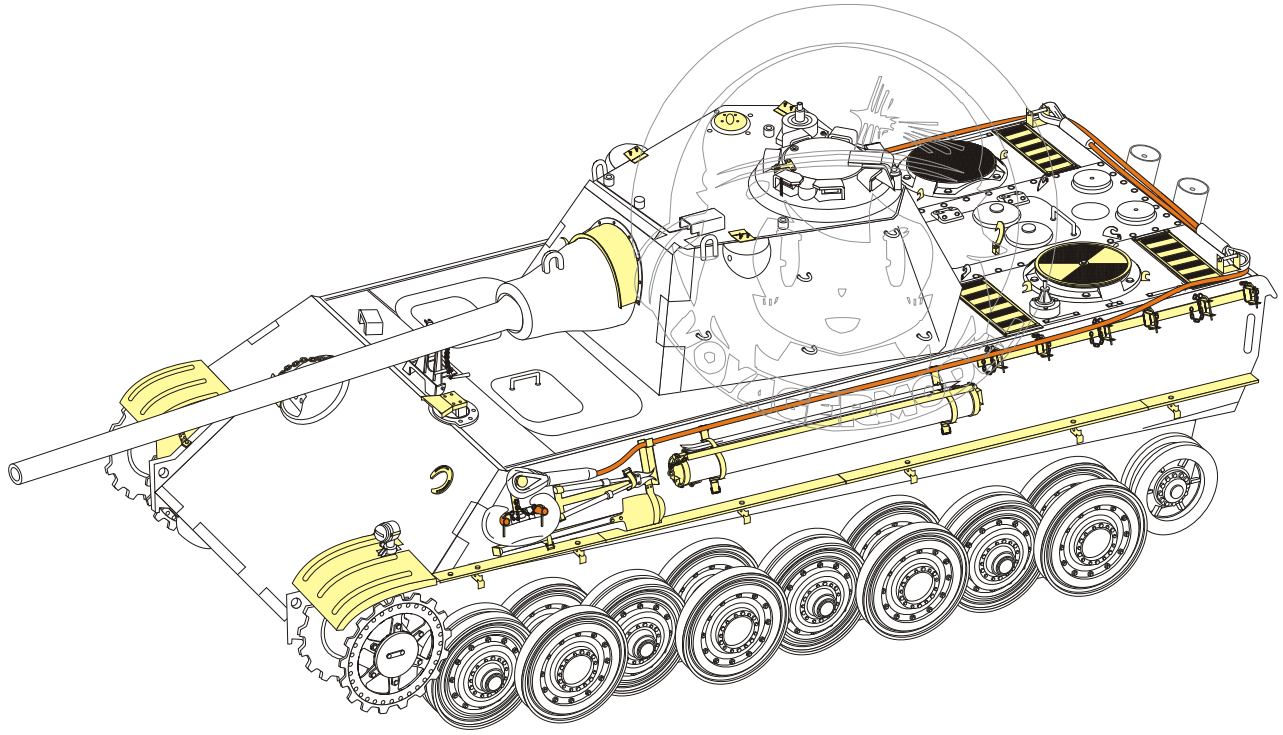

VOYAGERMODEL® The Best Upgrade Solution 无 微 不 至 极 尽 享 受	
Recommended item	
PE 35960	WWII German Bergepanther Ausf.G Basic
PE 35997	WWII German FlaKPanzer V COELIAN Basic
PE 35995	WWII German Panther G Later ver.Basic
PE 35996	WWII Jagdpanther G2 Version Basic Upgrade set
PE 35939	WWII Jagdpanther G1 Version Basic Upgrade set
PE 35979	WWII German Bergepanther Ausf.D (Early type,Panther A tool holders) Basic
PE 35980	WWII German Bergepanther Ausf.D (Late type,Panther G tool holders) Basic
PE 35983	WWII German Panther D Tank Late version Basic
PEA 430	WWII German Panther G Schurzen
PE A 437	WWII German Panther G/Jagdpanther G2 AntiAircraft Armor Patten1
PE A 438	WWII German Panther A/G Pz.Rgt.26 Anti Aircraft Armor
PE A 439	WWII German Panther G Infra Red FG1250&FG1253
VBS 0532	WWII German KwK42 L/70 Gun Barrel for Panther A/G
VBS 0533	WWII German KwK42 L/70 Gun Barrel for Panther D
PE 35939	WWII Jagdpanther G1 Version Basic Upgrade set
PE 35954	WWII Jagdpanther G1 Version Basic Upgrade set
PE 35955	WWII Jagdpanther G1 Version Basic Upgrade set
PE 35962	WWII Jagdpanther G2 Version Basic Upgrade set
PE 35969	WWII German Bergepanther Ausf.A (Early type,Panther A tool holders) Basic
PE 35970	WWII German Bergepanther Ausf.A (Late type,Panther G tool holders) Basic
PE 35979	WWII German Bergepanther Ausf.D (Early type,Panther A tool holders) Basic
PE 35980	WWII German Bergepanther Ausf.D (Late type,Panther G tool holders) Basic
PE 35992	WWII German Panther G Mid ver.Basic

VOYAGERMODEL® The Best Upgrade Solution 无 微 不 至 极 尽 享 受	
Recommended item	
PEA 070	WWII German Panther/Jagdpanther Cleaning rod bin
PEA 270	WWII German Panther A/G/F、JagdPanzer Demeged Road wheels
PE 35772	WWII German Panther A early ver. Basic DRAGON
PE 35797	WWII German Panther G Early ver.Basic TAMIYA
PE 35796	WWII German Panther D Basic TAMIYA
PE 35733	WWII German Panther D Basic ZERZDA
PE 35741	WWII German Panther D Basic ICM
PE 35773	WWII German Pz.Beob.Wg.V Ausf.D Basic DRAGON
PE 35883	WWII German Panther G Later ver.Basic DRAGON
PE 35882	WWII German Panther G Early ver.Basic DRAGON
PE 35924	WWII German Panther G Later ver.Basic
PE 35923	WWII German Panther G Early ver.Basic
PE 35960	WWII German Bergepanther Ausf.G Basic
PE 35996	WWII Jagdpanther G2 Version Basic Upgrade set
PE 35869	WWII German Panther II tank basic
PE 35870	WWII German Panther II Prototype Design Plan basic
PE 35867	WWII German Jagdpanther II tank destroyer basic
PE 35936	WWII German Panther D w/"Stadtgas" Fuel Tanks Basic
PE 35937	WWII German Panther D Tanks Basic

©2003-2026 SHANGHAI VOYAGERMODEL Co.,LTD