1/35 MILITARY MINIATURE VEHICLE UPGRADE SERIES PEA253

Modern HUMVEE electronic Antennas set

现代美军悍马车载天线/干扰器/卫星接收器组

[GP]

■推荐使用工具 RECOMMENDED TOOLS

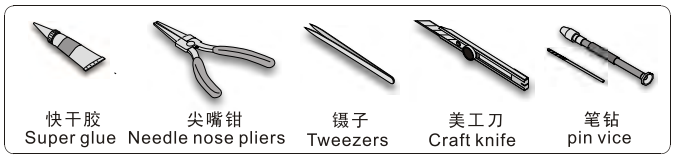

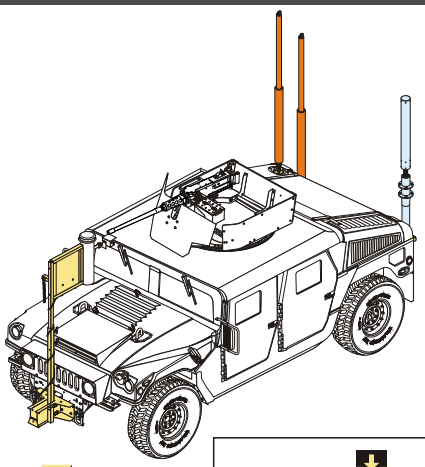

安装 install | 折叠 bend | A1 改造件零件编号 PE/resin part number | B12 原零件编号 kit part number | C22 被替换的原零件编号 replaced kit part number | 另一侧相同制作 repeat on opposite side

用尖端在凹槽处冲压
use penpoint to press on the dent

蚀刻片零件内侧面向上
Put the part upside down

用笔尖在凹槽处刮
Use penpoint to press on the dent

切除 remove | 打磨 grind off | 弧度卷曲 radial bending | ×2 制作若干组 multiple assembly | 选择安装 alternative | 钻孔 drill | 用胶棒制作 make from plastic rod

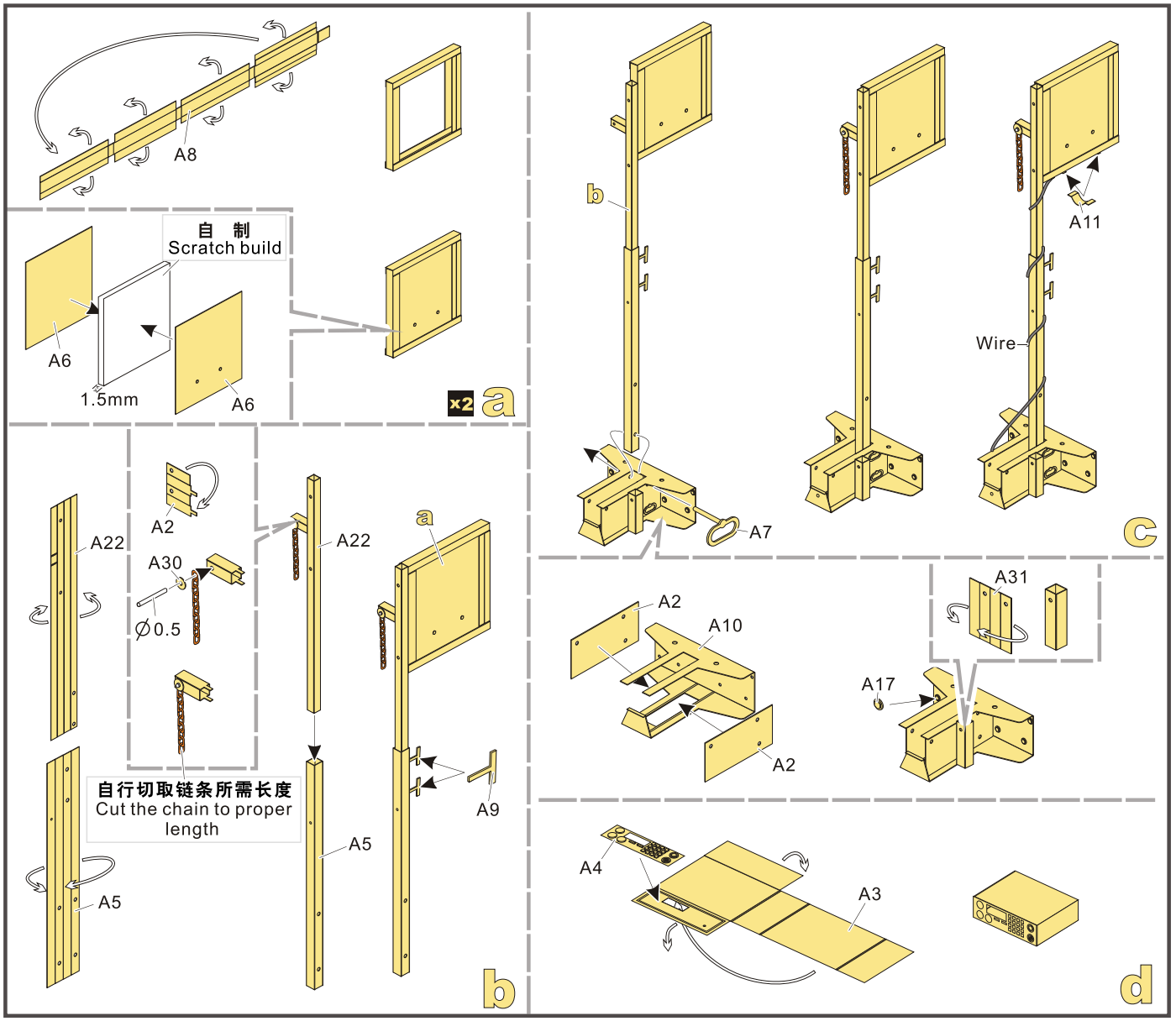

©2003-2011 SHANGHAI VOYAGERMODEL Co.,LTD

1/35 MILITARY MINIATURE VEHICLE UPGRADE SERIES PEA253

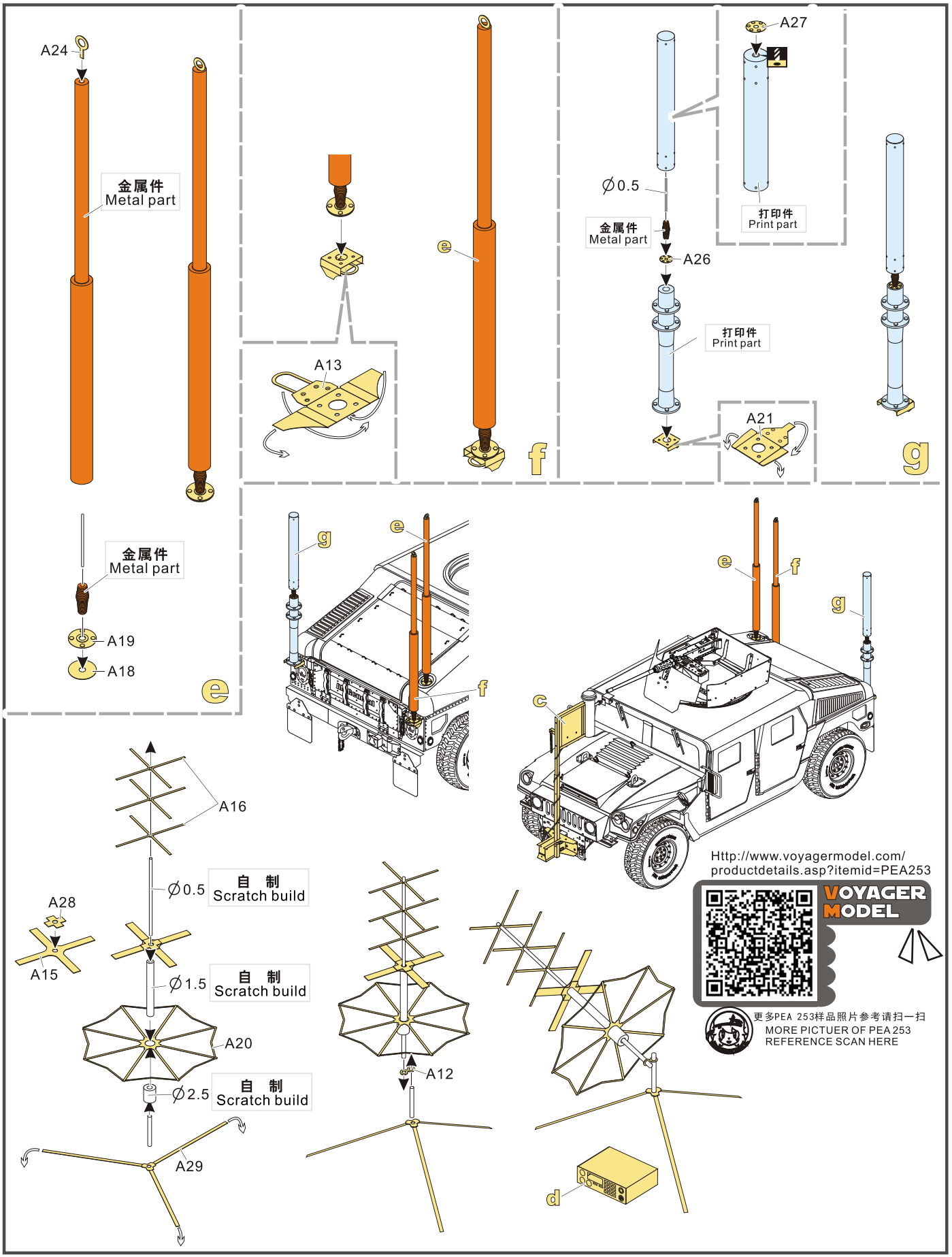

©2003-2011 SHANGHAI VOYAGERMODEL Co.,LTD